Automatic Washers

Refer to Page 3 for Model Numbers

Parts

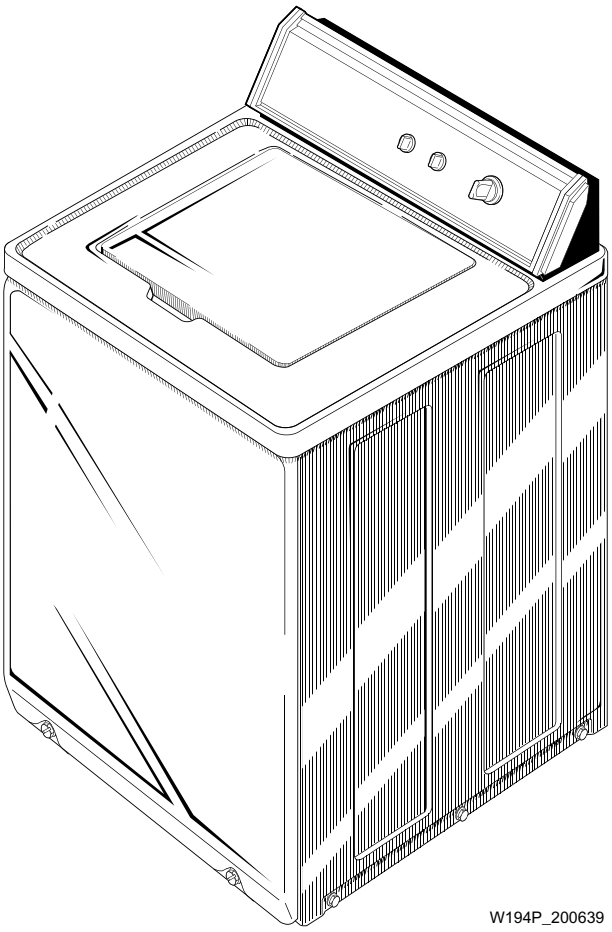

Alliance Laundry Systems

www.comlaundry.com

Part No. 200639R1
November 2006

Table of Contents

Title	Page
Parts Ordering Information	2
Nameplate Location	2
Model Identification	3
Control Panel and Controls (Drawing 1 of 2)	4
Control Panel and Controls (Drawing 2 of 2)	6
Control Panel and Timer	8
Cabinet Top, Loading Door and Control Hood	10
Switch and Bracket Assembly	12
Fill Hose, Back Flow Preventer and Mixing Valve Mounting Bracket - Models Through Serial No. N3605084	14
Fill Hose, Back Flow Preventer and Mixing Valve Mounting Bracket - Models Starting Serial No. N3605085	16
Mixing Valve Assembly	18
Short Post Drive	20
Agitator and Post	22
Lint Filter, Washtub and Hub	24
Outer Tub, Cover and Pressure Hose (Drawing 1 of 2)	26
Outer Tub, Cover and Pressure Hose (Drawing 2 of 2)	28
Motor and Mounting Bracket - Models Through Serial No. C3486773	30
Belts and Idler Assembly - Models Through Serial No. C3486773	32
Motor and Mounting Bracket - Models Starting Serial No. C3486774	34
Belts and Idler Assembly - Models Starting Serial No. C3486774	36
Bearing Housing, Brake, Pulley and Pivot Dome	38
Transmission Assembly and Balance Ring	40
Transmission Assembly	42
Pump Assembly, Bracket, Hoses and Siphon Break Kit (Drawing 1 of 2)	44
Pump Assembly, Bracket, Hoses and Siphon Break Kit (Drawing 2 of 2)	46
Front Panel, Cabinet and Base	48
Power Cord and Wire Terminals	50
Special Tools	52
Parts Index	55

© Copyright 2006, Alliance Laundry Systems LLC

All rights reserved. No part of the contents of this book may be reproduced or transmitted in any form or by any means without the expressed written consent of the publisher.

Parts Ordering Information

If literature or replacement parts are required, contact the source from whom the machine was purchased or contact Alliance Laundry Systems at (920) 748-3950 for the name and address of the nearest authorized parts distributor.

For technical assistance, call (920) 748-3121.

Nameplate Location

When calling or writing about your product, be sure to mention model and serial numbers. Model and serial numbers are located on nameplate(s) as shown.

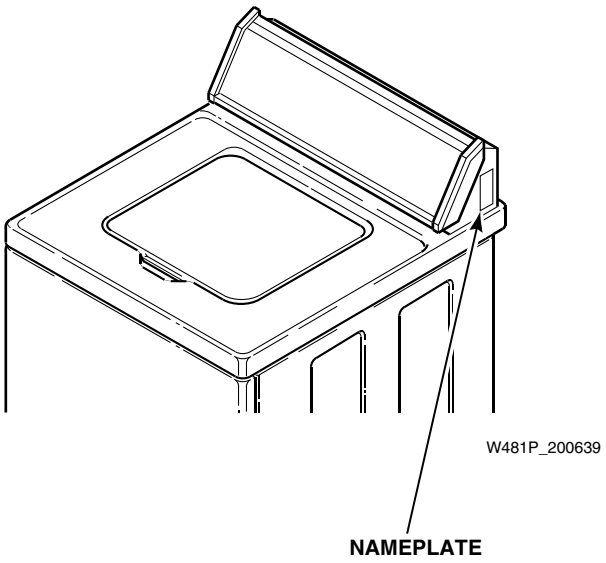

© Copyright, Alliance Laundry Systems LLC – DO NOT COPY or TRANSMIT

Model Identification

Information in this manual is applicable to these washer models:

HA1000	HA4000	HA4210	HA4500	HA6000
HA1000-3059	HA4001	HA4210-2200	HA4501	HA6001
HA2010	HA4010	HA4211	HA4510	HA6420
HA2300	HA4010-1088	HA4211-2200	HA4511	HA6421
HA2410	HA4010-2200	HA4260	HA4511-3050	HA6450
HA2411	HA4010-3059	HA4261	HA4511-3062	HA6452
HA2620	HA4011	HA4290	HA4520	HA6470
HA2621	HA4011-1088	HA4291	HA4521	HA6471
HA3000	HA4011-2200	HA4340	HA4590	HA7001
HA3001	HA4011-3059	HA4341	HA4591	HA7221
	HA4020	HA4370	HA5000	
	HA4021	HA4371	HA5001	
			HA5320	
			HA5321	
			HA5590	
			HA5591	

© Copyright, Alliance Laundry Systems LLC – DO NOT COPY or TRANSMIT

Control Panel and Controls (Drawing 1 of 2)

Models HA1000, HA1000-3059, HA3000, HA3001, HA4000, HA4001, HA4010, HA4010-1088, HA4010-2200, HA4010-3059, HA4011, HA4011-1088, HA4011-2200, HA4011-3059, HA4210, HA4210-2200, HA4211, HA4211-2200, HA4290, HA4291, HA4500, HA4501, HA4510, HA4511, HA4511-3050, HA4511-3062, HA4520, HA4521, HA4590, HA4591, HA5000, HA5001, HA5590, HA5591, HA6000, HA6001 and HA7001

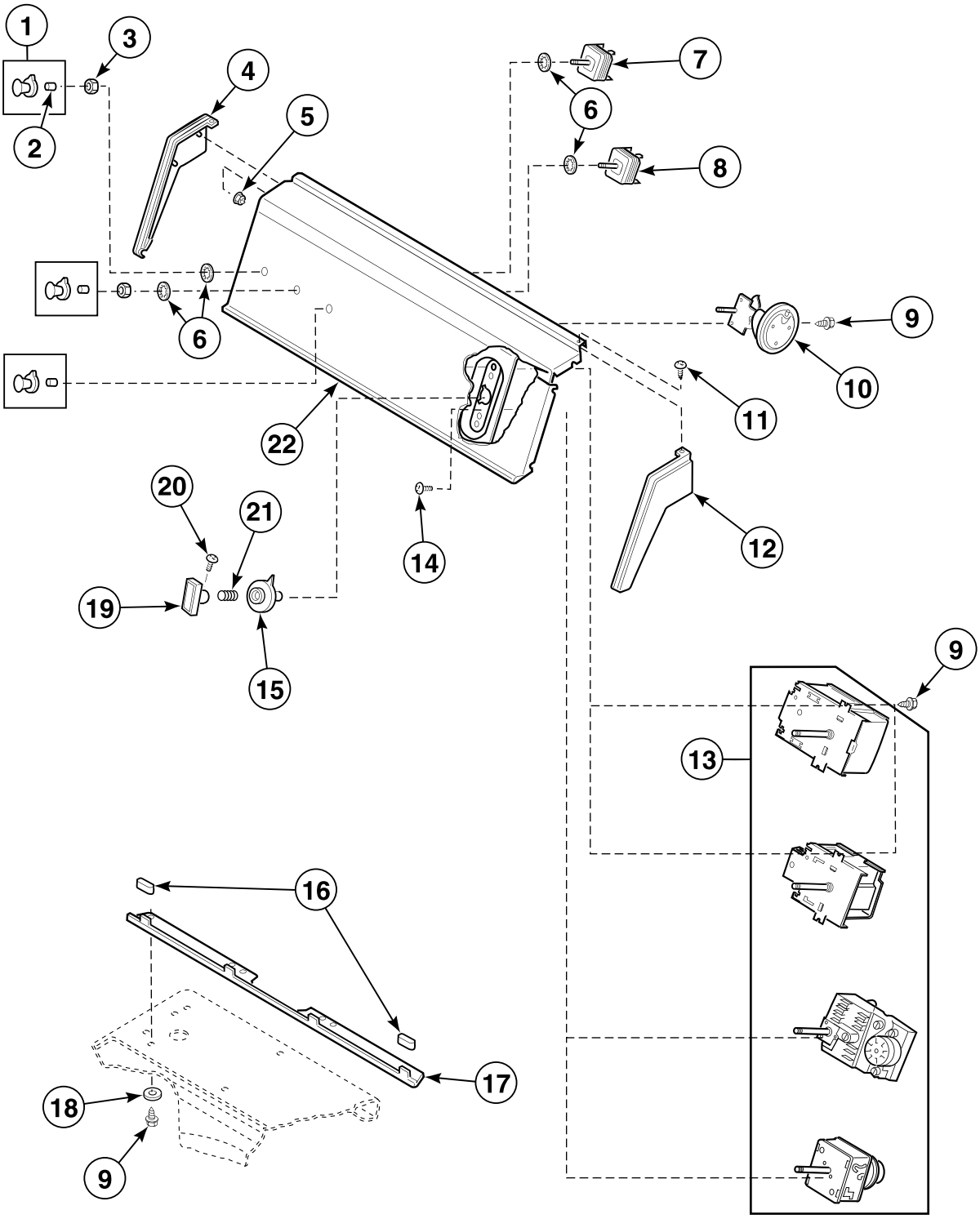

W447P_200639

© Copyright, Alliance Laundry Systems LLC – DO NOT COPY or TRANSMIT

Control Panel and Controls (Drawing 1 of 2)

REF	PART NO.	DESCRIPTION	COMMENTS
1	N/A	Control Knob Assembly	
2	N/A	Clip	
3	57584	Nut	
4	N/A	Control Hood End	Left
5	N/A	Nut	
6	91176	Washer	
7	21300	Temperature Switch	Models HA3000, HA3001, HA4000, HA4001, HA4500, HA4501, HA5000, HA5001, HA5590 and HA5591
	28118	Water Temperature Switch	Models HA4010, HA4010-1088, HA4010-2200, HA4010-3059, HA4011, HA4011-1088, HA4011-2200, HA4011-3059, HA4210, HA4210-2200, HA4211, HA4211-2200, HA4290, HA4291, HA4510, HA4511, HA4511-3050, HA4511-3062, HA4520, HA4521, HA4590, HA4591, HA6000 and HA6001
	N/A	Temperature Switch	Model HA7001
8	N/A	Motor Switch	Models HA4210, HA4210-2200, HA4211, HA4211-2200, HA4520, HA4521, HA6000 and HA6001
	27500	Speed Selector Switch	Model HA7001
9	23962	Screw	
10	27778	Pressure Switch	
11	25232	Screw	
12	N/A	Control Hood End	Right
13	N/A	Timer	Models HA4010-1088 and HA4011-1088
	N/A	Timer	Models HA3000 and HA3001 through Serial No. B3533857
	28948P	Timer	Models HA4010-3059, HA4011-3059, HA4511-3050 and HA4511-3062
	27693	Timer	Model HA7001 through Serial No. B3533857
	28093	Timer	Models HA4010, HA4010-2200, HA4011, HA4011-2200, HA4210, HA4210-2200, HA4211, HA4211-2200, HA4510, HA4511, HA4520, HA5000, HA5001, HA6000 and HA6001 through Serial No. B3533857; Model HA4521 through Serial No. B3547780
	28918P	Timer	Models HA3000, HA3001, HA4000, HA4001, HA4500 and HA4501 starting Serial No. B3533858
	28917P	Timer	Models HA4010, HA4011, HA4210, HA4211, HA4510, HA4511, HA4520, HA5000, HA5001, HA6000 and HA6001 starting Serial No. B3533858; Model HA4521 starting Serial No. B3547781
	29966P	Timer	Models HA4290, HA4291, HA4590, HA4591, HA5590 and HA5591 starting Serial No. B3533858
	N/A	Timer	Model HA7001 starting Serial No. B3533858
14	N/A	Screw	
15	N/A	Timer Knob Indicator	
16	N/A	Sleeve	
17	N/A	Panel Support Bracket	
18	N/A	Washer	
19	N/A	Timer Knob	
20	N/A	Screw	
21	N/A	Spring	
22	N/A	Control Panel	

N/A = Part no longer available

© Copyright, Alliance Laundry Systems LLC – DO NOT COPY or TRANSMIT

Control Panel and Controls (Drawing 2 of 2)

Models HA2300, HA2410, HA2411, HA2620, HA2621, HA4020, HA4021, HA4260, HA4261, HA4340, HA4341, HA4370, HA4371, HA5320, HA5321, HA6420, HA6421, HA6450, HA6452, HA6470, HA6471 and HA7221

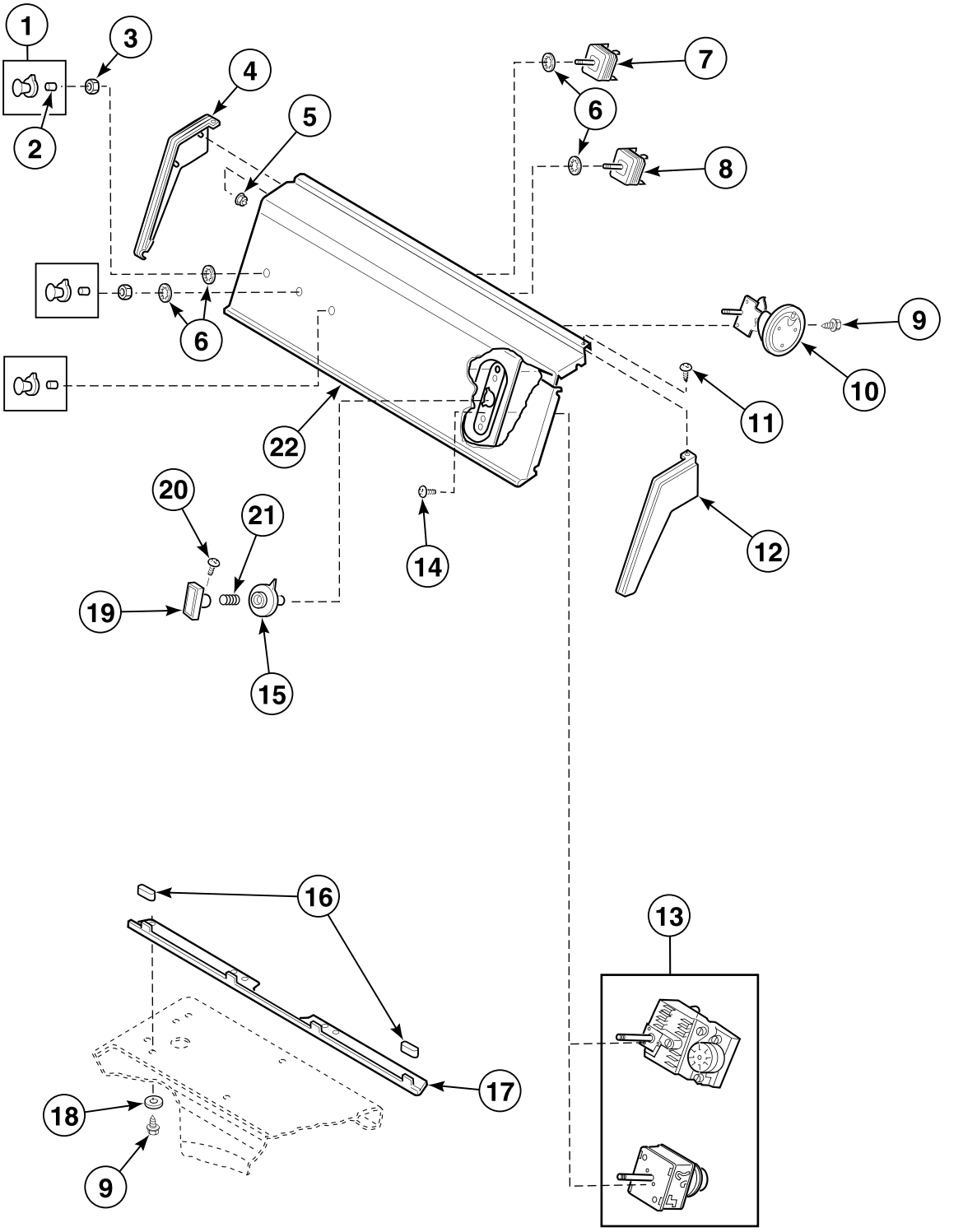

© Copyright, Alliance Laundry Systems LLC – DO NOT COPY or TRANSMIT

Control Panel and Controls (Drawing 2 of 2)

REF	PART NO.	DESCRIPTION	COMMENTS
1	N/A	Control Knob Assembly	
2	N/A	Clip	
3	57584	Nut	
4	N/A	Control Hood End	Left
5	N/A	Nut	
6	91176	Washer	
7	N/A	Temperature Switch	Models HA6420, HA6421 and HA7221
	21300	Temperature Switch	All other models
8	27500	Speed Selector Switch	Models HA6420, HA6421 and HA7221
	N/A	Action Switch	Models HA2410, HA2411, HA2620, HA2621, HA4260, HA4261, HA4370, HA4371, HA6450, HA6452, HA6470 and HA6471
9	23962	Screw	
10	27778	Pressure Switch	
11	25232	Screw	
12	N/A	Control Hood End	Right
13	27693	Timer	Models HA2620, HA2621, HA6470, HA6471 and HA7221
	N/A	Timer	All other models
14	N/A	Screw	
15	N/A	Timer Knob Indicator	
16	N/A	Sleeve	
17	N/A	Panel Support Bracket	
18	N/A	Washer	
19	N/A	Timer Knob	
20	N/A	Screw	
21	N/A	Spring	
22	N/A	Control Panel	

N/A = Part no longer available

© Copyright, Alliance Laundry Systems LLC – DO NOT COPY or TRANSMIT

Control Panel and Timer

Model HA2010

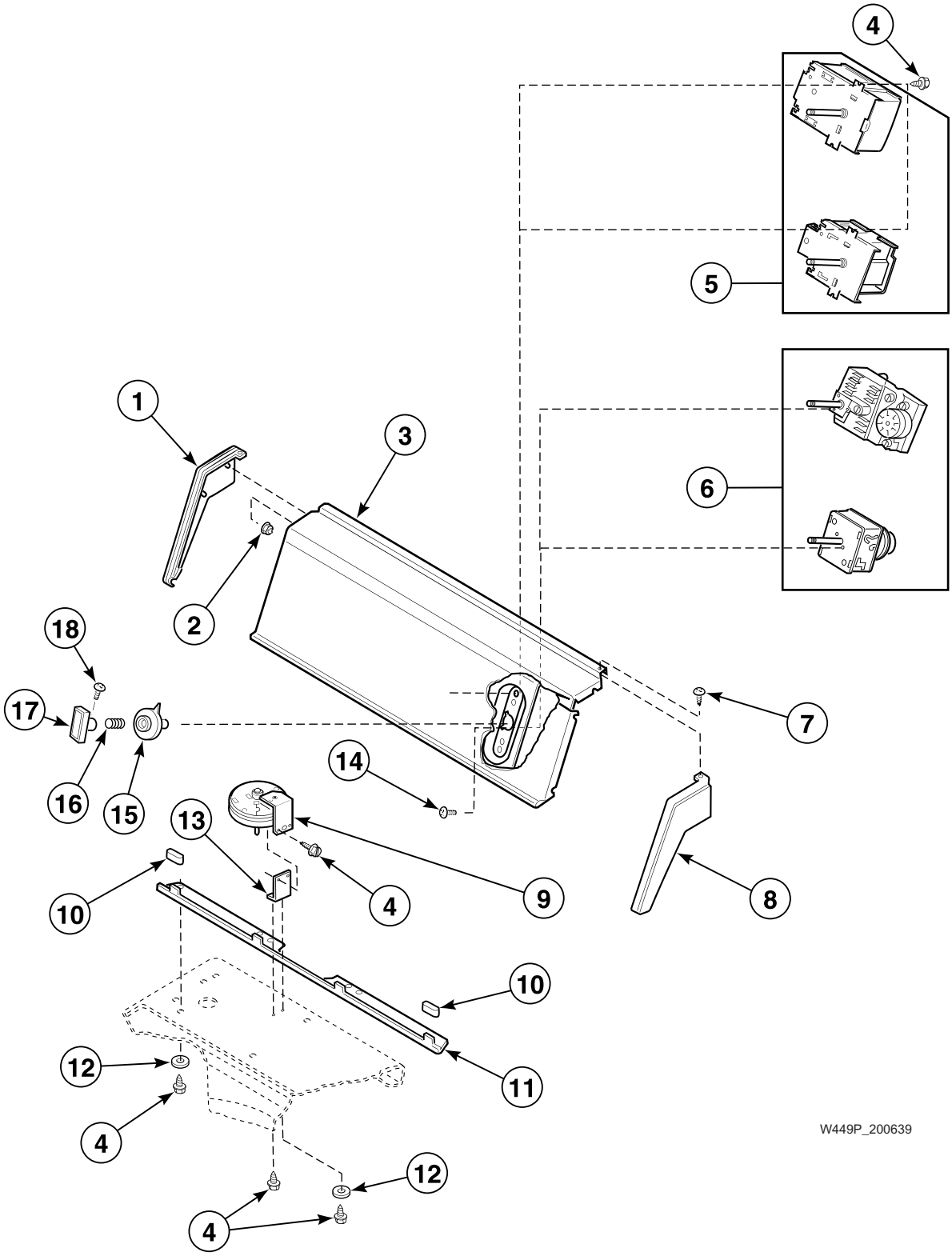

© Copyright, Alliance Laundry Systems LLC – DO NOT COPY or TRANSMIT

Control Panel and Timer

REF	PART NO.	DESCRIPTION	COMMENTS
1	N/A	Control Hood End	Left
2	N/A	Nut	
3	N/A	Control Panel	
4	23962	Screw	
5	28918P	Timer	Models starting Serial No. B3533858
6	N/A	Timer	Models through Serial No. B3533857
7	25232	Screw	
8	N/A	Control Hood End	Right
9	28615P	Pressure Switch	
10	N/A	Sleeve	
11	N/A	Panel Support Bracket	
12	N/A	Washer	
13	N/A	Pressure Switch Bracket	
14	N/A	Screw	
15	N/A	Timer Knob Indicator	
16	N/A	Spring	
17	N/A	Timer Knob	
18	N/A	Screw	

N/A = Part no longer available

© Copyright, Alliance Laundry Systems LLC – DO NOT COPY or TRANSMIT

Cabinet Top, Loading Door and Control Hood

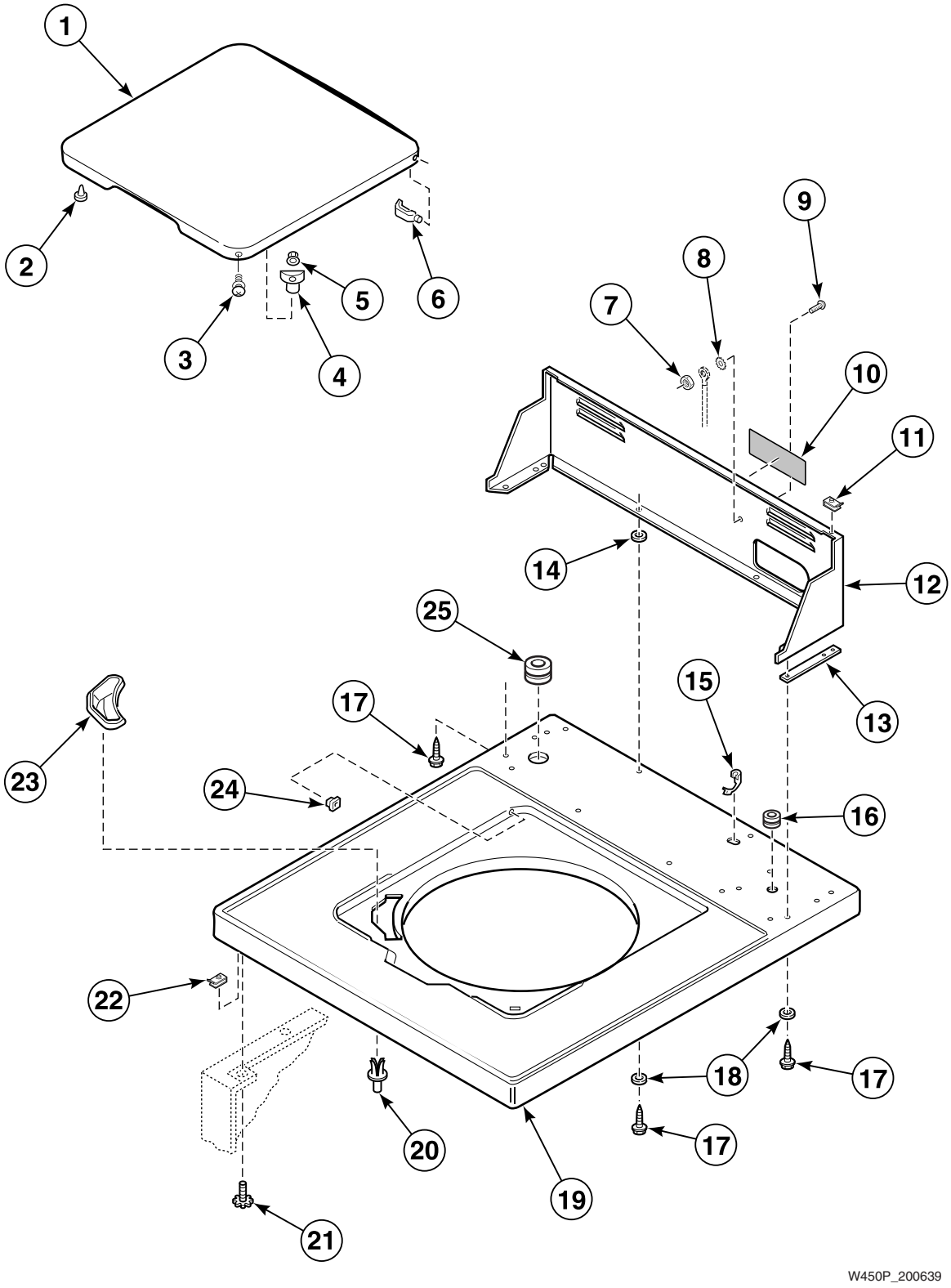

© Copyright, Alliance Laundry Systems LLC – DO NOT COPY or TRANSMIT

Cabinet Top, Loading Door and Control Hood

REF	PART NO.	DESCRIPTION	COMMENTS
	N/A	Lid Lock Kit	Models HA1000-3059, HA4010-3059 and HA4011-3059
1	N/A	Loading Door	
2	21685	Bumper	
3	N/A	Screw and Washer Assembly	
4	27149	Lid Switch Catch	
5	21752	Nut	
6	27626	Hinge	
7	03673	Nut	
8	03815	Washer	
9	20267	Screw	
10	505281	Disconnect Power Warning Label	
11	24522	Nut	
12	N/A	Control Hood	
13	N/A	Gasket	
14	N/A	Washer	
15	38384	Strain Relief	
16	N/A	Grommet	Models through Serial No. 341P6380
17	23962	Screw	
18	N/A	Washer	
19	N/A	Cabinet Top	
20	56534	Support Barrel	Models starting Serial No. F3493391
21	23008	Screw	
22	36020	Nut	
23	34776	Bleach Dispenser	All models except HA1000, HA1000-3059, HA2010, HA2300, HA3000, HA3001, HA4000, HA4001, HA4290, HA4291, HA4500 and HA4501
24	27625	Bushing	
25	N/A	Grommet	Models through Serial No. 341P6380

N/A = Part no longer available

© Copyright, Alliance Laundry Systems LLC – DO NOT COPY or TRANSMIT

Switch and Bracket Assembly

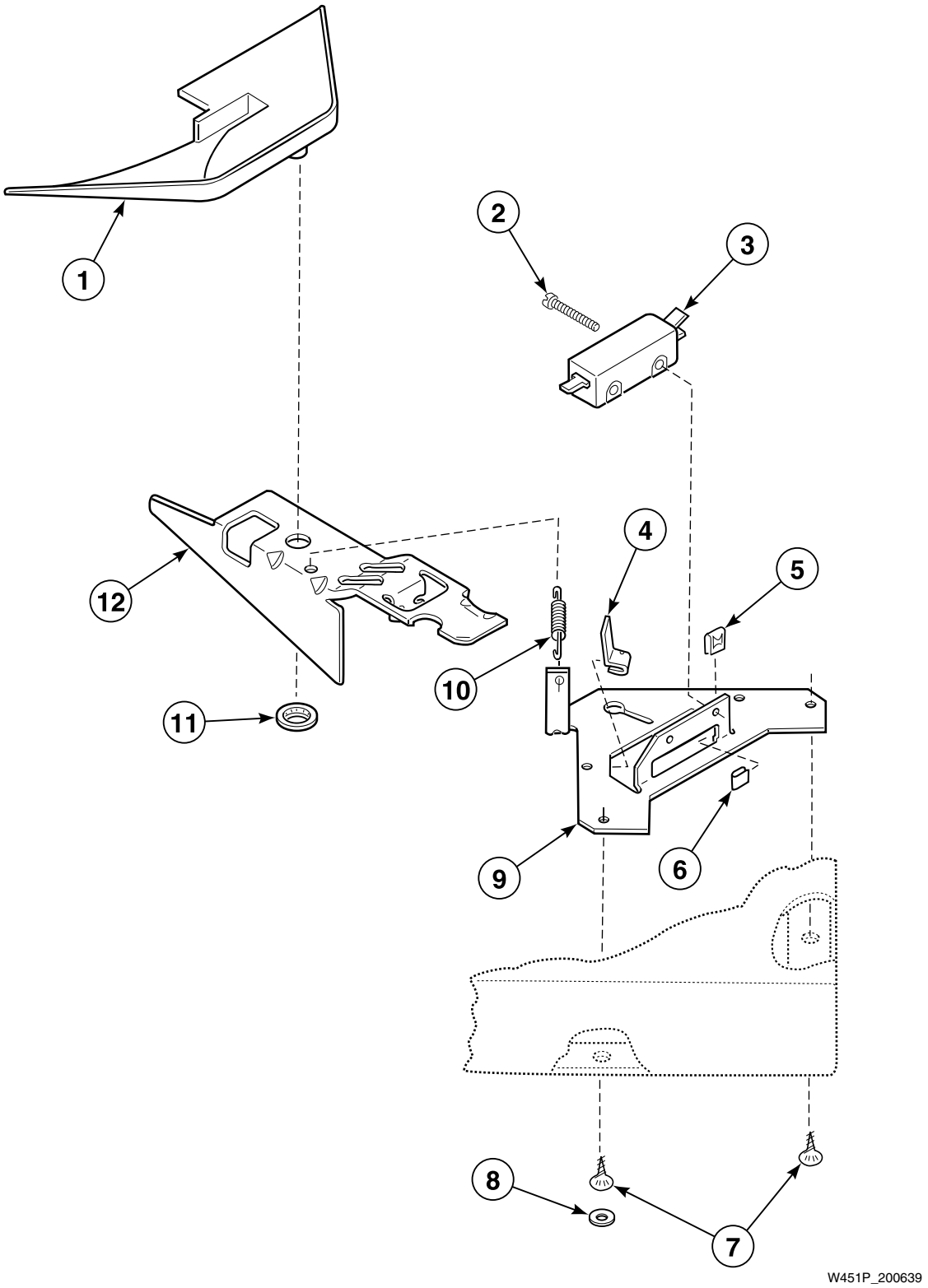

© Copyright, Alliance Laundry Systems LLC – DO NOT COPY or TRANSMIT

Switch and Bracket Assembly

REF	PART NO.	DESCRIPTION	COMMENTS
1	29042	Lid Switch Shield	Models starting Serial No. C3486144
2	Q6516	Screw	
3	27249	Switch	
4	N/A	U-Clip	
5	N/A	Nut	
6	N/A	U-Clip	
7	28193	Screw	
8	N/A	Washer	
9	27250	Out-of-Balance Switch Bracket	
10	N/A	Spring	
11	29043	Nut	
12	27602	Out-of-Balance Switch Lever	

N/A = Part no longer available

© Copyright, Alliance Laundry Systems LLC – DO NOT COPY or TRANSMIT

Fill Hose, Back Flow Preventer and Mixing Valve Mounting Bracket - Models Through Serial No. N3605084

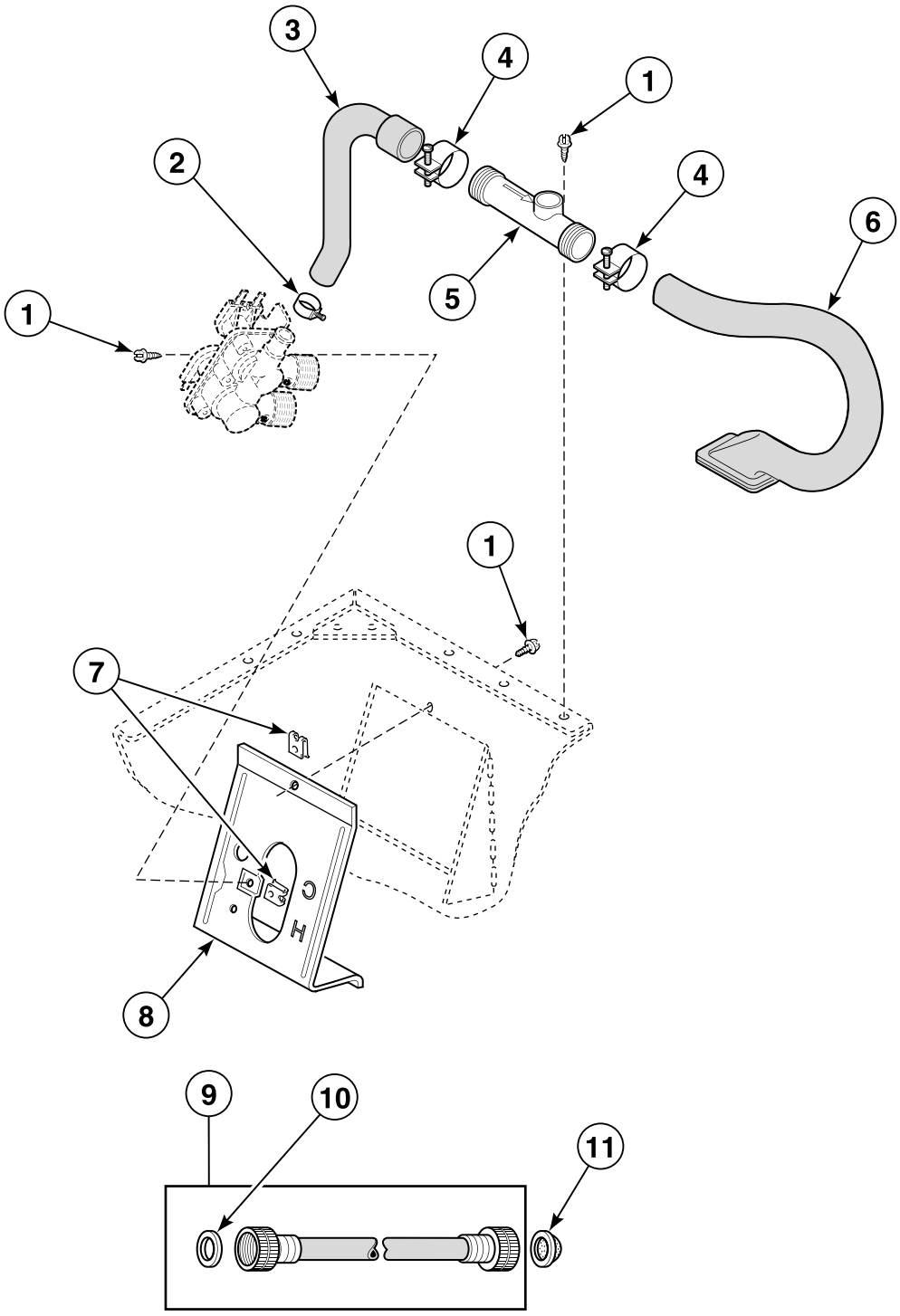

W452P_200639

© Copyright, Alliance Laundry Systems LLC – DO NOT COPY or TRANSMIT

Fill Hose, Back Flow Preventer and Mixing Valve Mounting Bracket - Models Through Serial No. N3605084

REF	PART NO.	DESCRIPTION	COMMENTS
1	23962	Screw	
2	36801	Hose Clamp	
3	27183	Mixing Valve Hose	
4	20211	Hose Clamp	
5	34280	Backflow Preventer Assembly	
6	N/A	Hose	
7	N/A	Nut	
8	39407	Mixing Valve Mounting Bracket	
9	28330P	Fill Hose Kit	4 feet; Hose is equipped with 2 standard hose couplings; Includes item 10
	38349P	Fill Hose Kit	5 feet; Hose is equipped with 1 metric and 1 standard hose coupling; Includes item 10
10	20290	Washer	
11	F270300	Filter Screen	

N/A = Part no longer available

© Copyright, Alliance Laundry Systems LLC – DO NOT COPY or TRANSMIT

Fill Hose, Back Flow Preventer and Mixing Valve Mounting Bracket - Models Starting Serial No. N3605085

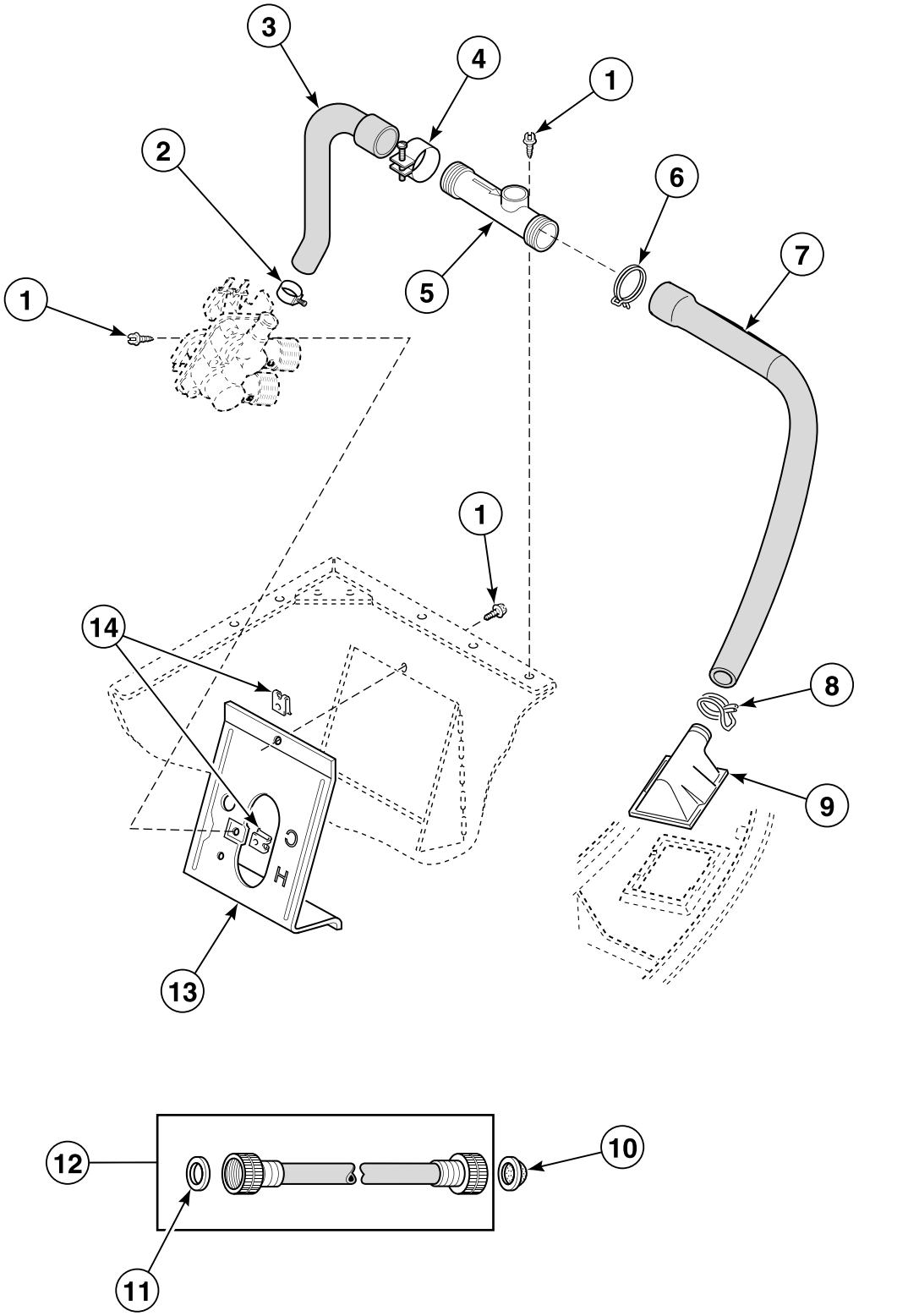

© Copyright, Alliance Laundry Systems LLC – DO NOT COPY or TRANSMIT

Fill Hose, Back Flow Preventer and Mixing Valve Mounting Bracket - Models Starting Serial No. N3605085

REF	PART NO.	DESCRIPTION	COMMENTS
1	23962	Screw	
2	36801	Hose Clamp	
3	27183	Mixing Valve Hose	
4	20211	Hose Clamp	
5	34280	Backflow Preventer Assembly	
6	35370	Hose Clamp	Green
7	29182	Water Inlet Hose	
8	29210	Hose Clamp	Red
9	N/A	Water Inlet Head	
10	F270300	Filter Screen	
11	20290	Washer	
12	28330P	Fill Hose Kit	4 feet; Hose is equipped with 2 standard hose couplings; Includes item 11
	38349P	Fill Hose Kit	5 feet; Hose is equipped with 1 metric and 1 standard hose coupling; Includes item 11
13	39407	Mixing Valve Mounting Bracket	
14	N/A	Nut	

N/A = Part no longer available

© Copyright, Alliance Laundry Systems LLC – DO NOT COPY or TRANSMIT

Mixing Valve Assembly

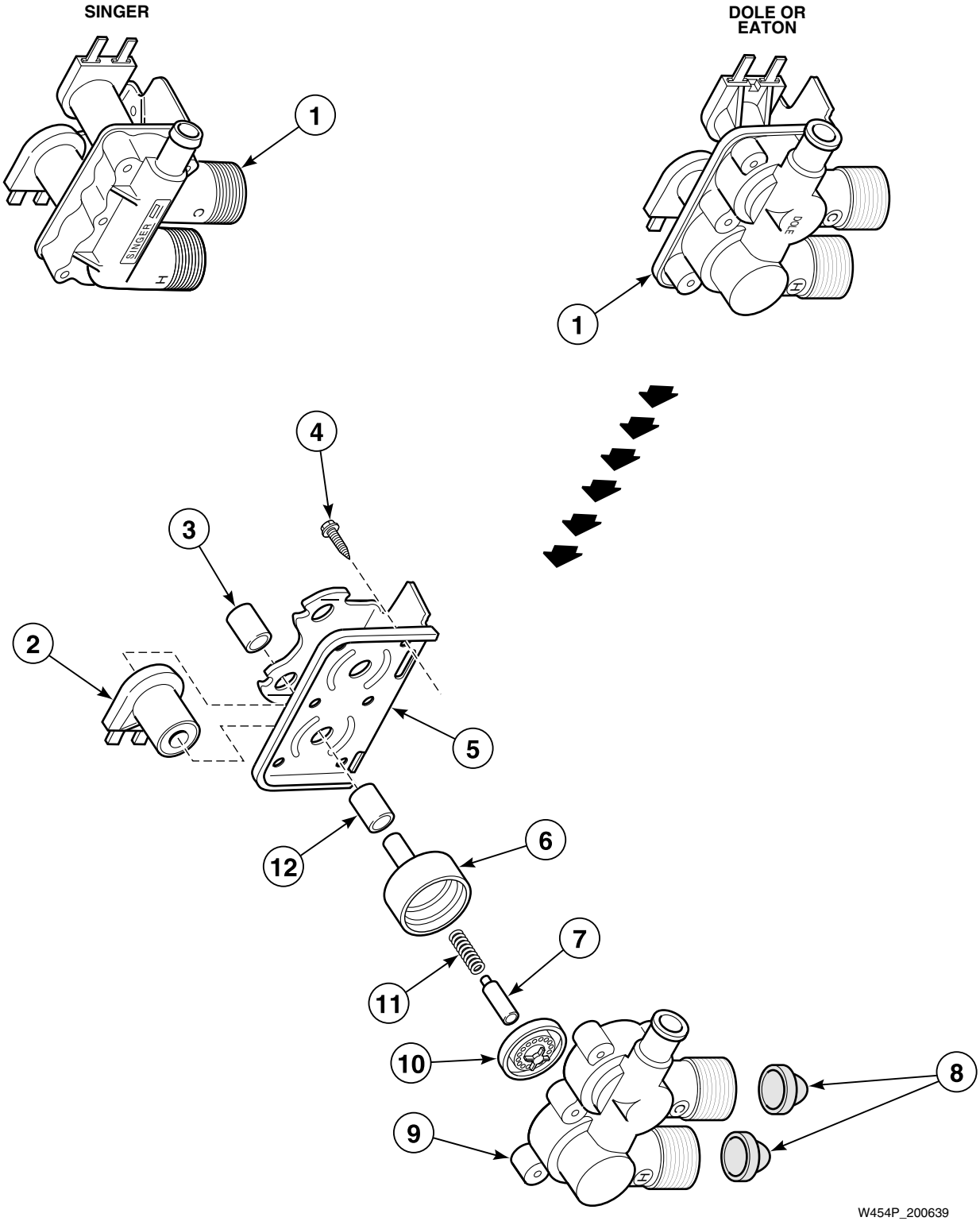

© Copyright, Alliance Laundry Systems LLC – DO NOT COPY or TRANSMIT

Mixing Valve Assembly

REF	PART NO.	DESCRIPTION	COMMENTS
1	35856P	Mixing Valve	Models HA1000-3059, HA4010-3059, HA4011-3059, HA4511-3050 and HA4511-3062
	33930P	Mixing Valve	All other models; Singer components no longer available
2	N/A	Solenoid	
3	N/A	Sleeve	Long
4	N/A	Screw	
5	N/A	Mounting Bracket	
6	N/A	Armature Guide	
7	N/A	Armature	
8	F270200	Strainer	
9	N/A	Valve Body	
10	N/A	Diaphragm	
11	N/A	Spring	
12	N/A	Sleeve	Short

N/A = Part no longer available

© Copyright, Alliance Laundry Systems LLC – DO NOT COPY or TRANSMIT

Short Post Drive

Models with Suffix *A 9975

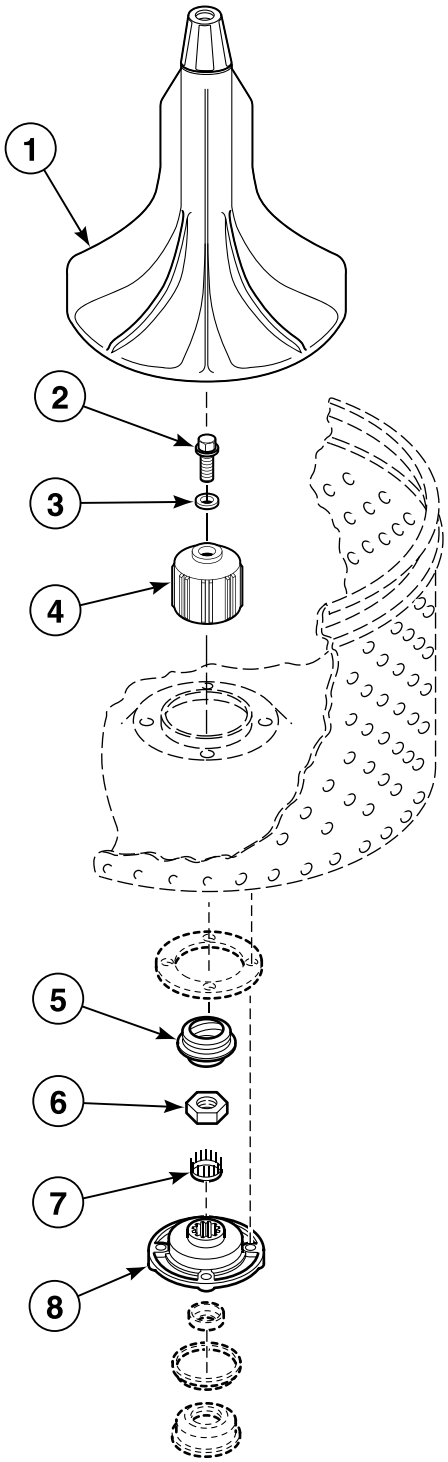

W456P_200639

© Copyright, Alliance Laundry Systems LLC – DO NOT COPY or TRANSMIT

Short Post Drive

REF	PART NO.	DESCRIPTION	COMMENTS
1	33514	Agitator	
2	N/A	Screw	
3	N/A	Washer	
4	39508P	Drive Bell and Seal Kit	
5	N/A	Seal Head	
6	29220	Nut	
7	29728	Spline Insert	
8	495P3	Hub and Seal Kit	

N/A = Part no longer available

© Copyright, Alliance Laundry Systems LLC – DO NOT COPY or TRANSMIT

Agitator and Post

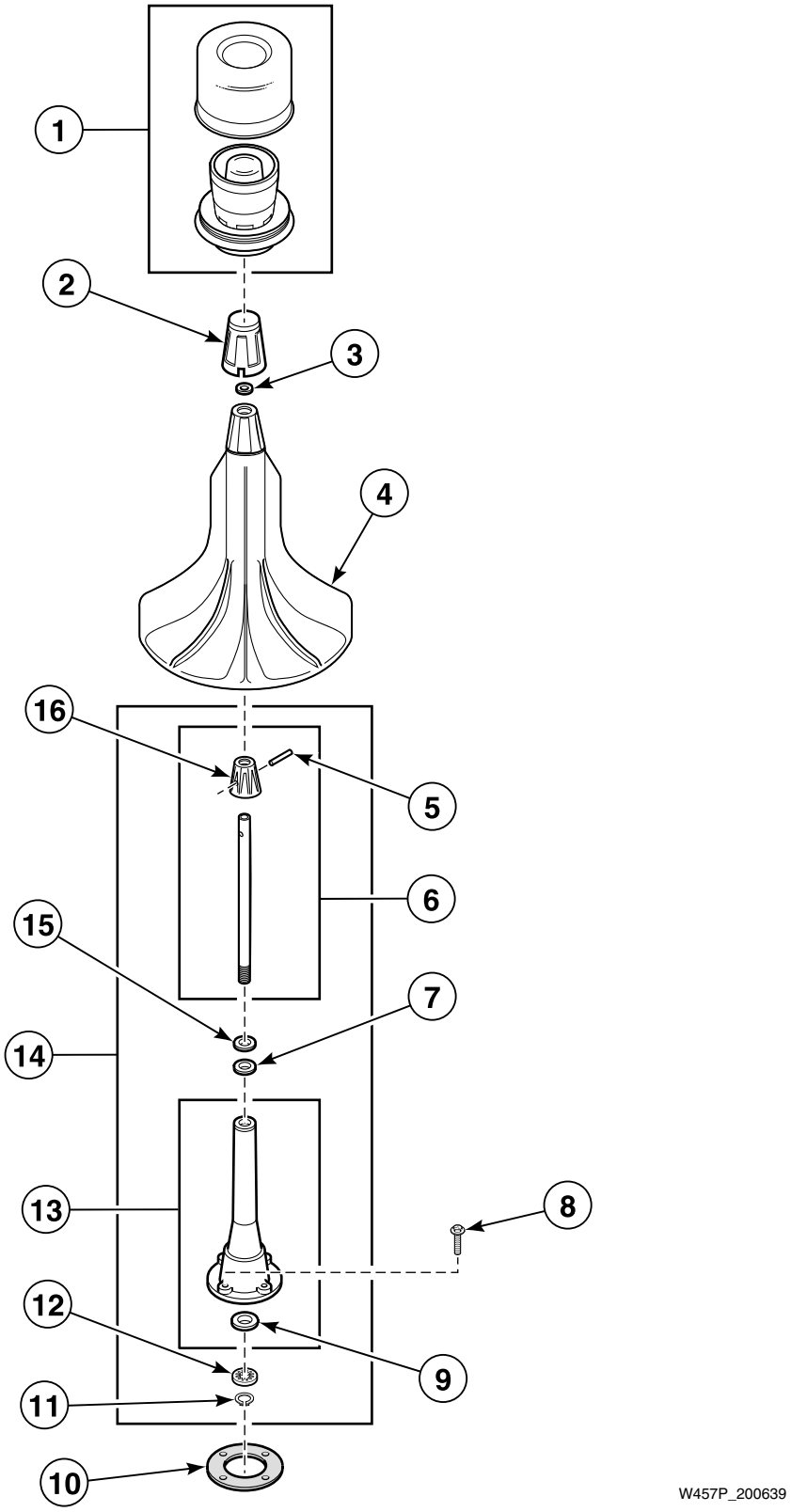

© Copyright, Alliance Laundry Systems LLC – DO NOT COPY or TRANSMIT

Agitator and Post

REF	PART NO.	DESCRIPTION	COMMENTS
	37577P	Transmission Sealant	Use with item 13 or 14
1	N/A	Fabric Softener Dispenser	Optional on some models
2	N/A	Hold-Down Cap	
3	27189	Washer	
4	N/A	Agitator Assembly	
5	N/A	Taper Pin	
6	28091	Agitator Shaft Assembly	
7	04704	Washer	Stainless steel
8	27202	Screw	
9	N/A	Washer	
10	27020	Gasket	Use with 27130 Agitator Post or 27131 Agitator Post Assembly
11	27197	Retaining Ring	
12	N/A	Washer	
13	N/A	Center Column Assembly	
14	N/A	Center Column Assembly	
15	20057	Washer	
16	28091	Agitator Shaft Assembly	

N/A = Part no longer available

© Copyright, Alliance Laundry Systems LLC – DO NOT COPY or TRANSMIT

Lint Filter, Washtub and Hub

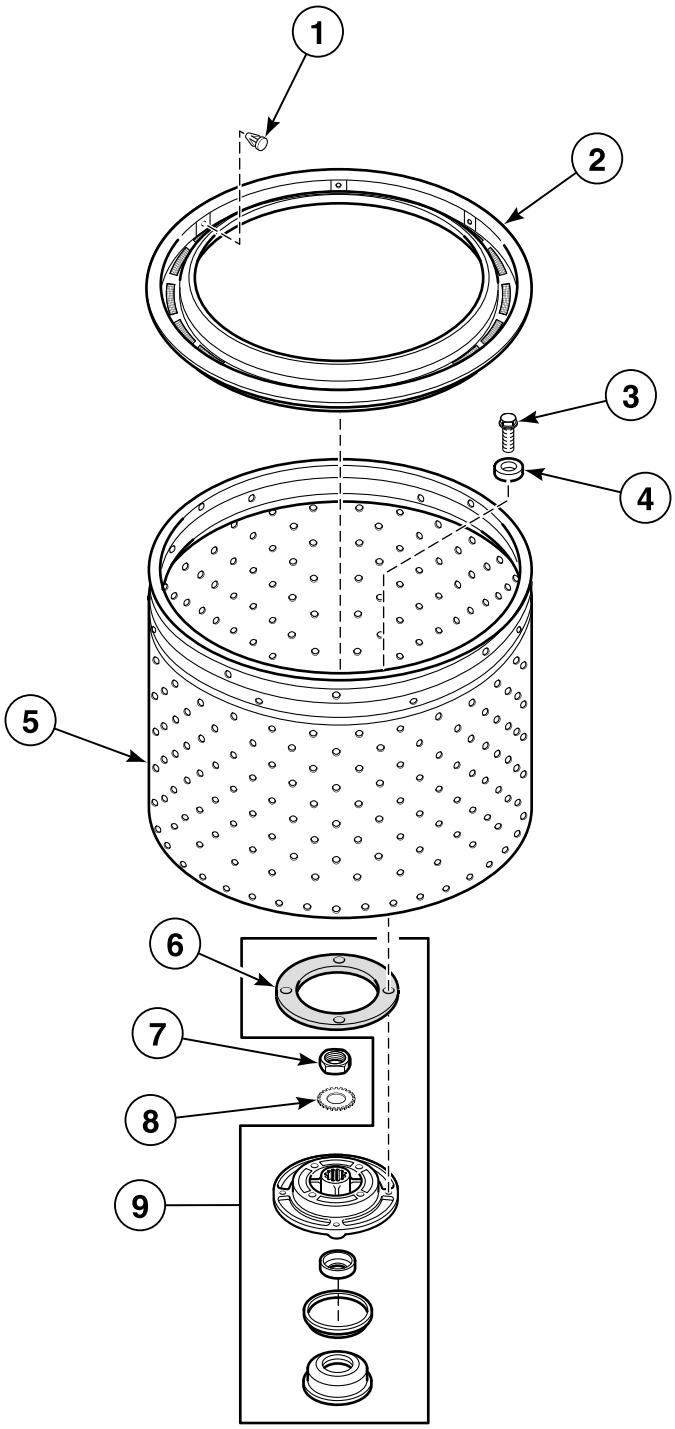

W459P_200639

© Copyright, Alliance Laundry Systems LLC – DO NOT COPY or TRANSMIT

Lint Filter, Washtub and Hub

REF	PART NO.	DESCRIPTION	COMMENTS
1	29474	Lint Filter Fastener	
2	33521	Lint Filter	
3	27202	Screw	
4	28094	Washer	
5	39252P	Tub Assembly	Porcelain
	39387P	Tub Assembly	Stainless steel
6	39122	Washtub Gasket	
7	29220	Nut	
8	N/A	Washer	
9	356P3	Seal Kit	Includes 27184 Cover Gasket

N/A = Part no longer available

© Copyright, Alliance Laundry Systems LLC – DO NOT COPY or TRANSMIT

Outer Tub, Cover and Pressure Hose (Drawing 1 of 2)

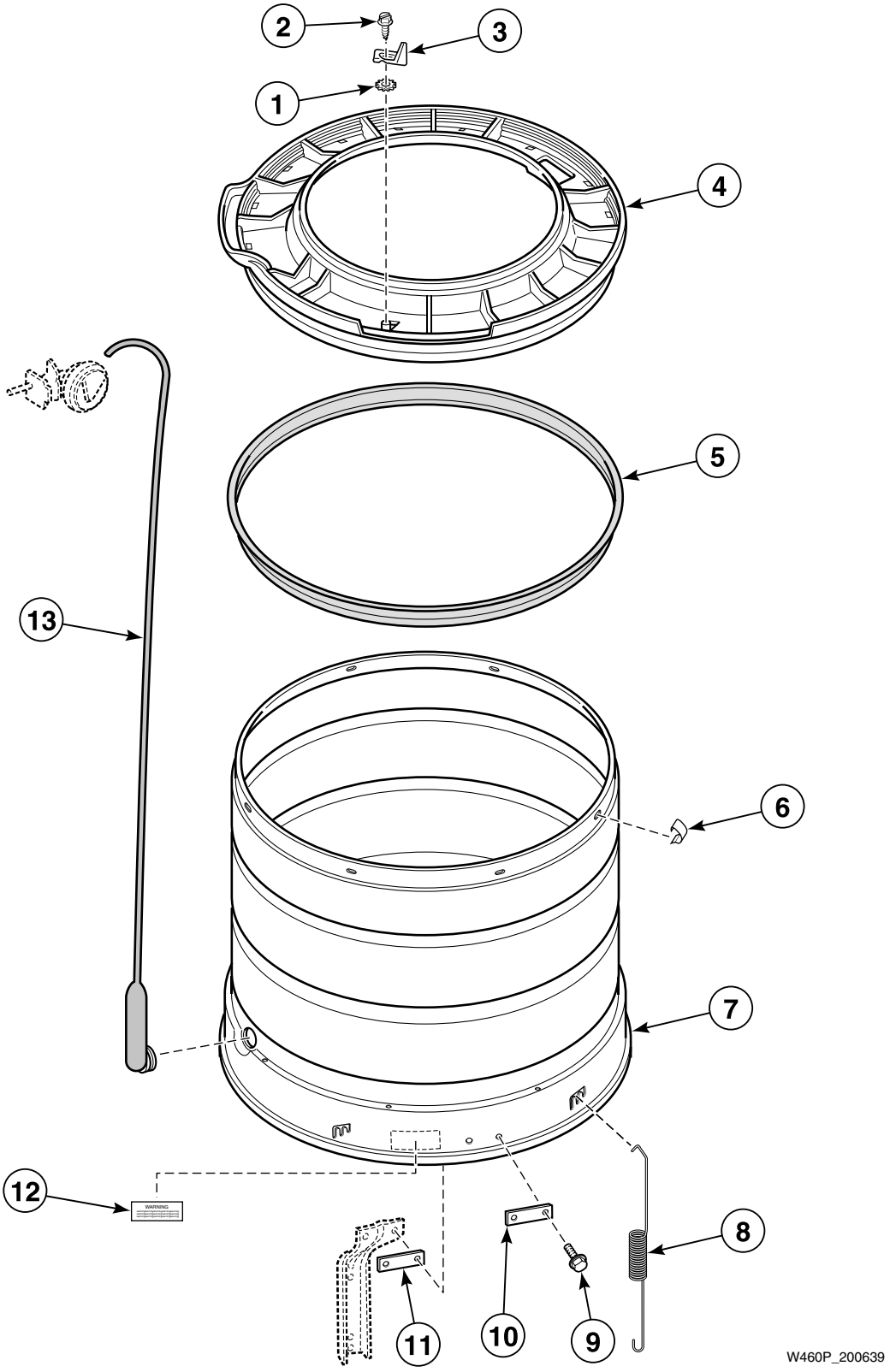

© Copyright, Alliance Laundry Systems LLC – DO NOT COPY or TRANSMIT

Outer Tub, Cover and Pressure Hose (Drawing 1 of 2)

REF	PART NO.	DESCRIPTION	COMMENTS
1	03815	Washer	
2	503661	Screw	
3	N/A	Trigger	
4	31153	Outer Tub Cover	Models through Serial No. N3605084
5	27184	Tub Cover Gasket	Included with 356P3 Hub and Seal Kit
6	27017	Spring Clip	
7	507P3	Outer Tub Kit	Model HA2010 through Serial No. L3627520
	N/A	Outer Tub	All other models through Serial No. L3627520
8	27239	Leg Spring	
9	35369	Screw	
10	27926	Leg Plate	.063 inch thick
11	N/A	Leg Plate	.032 inch thick
12	N/A	Warning Sticker	
13	30930P	Accumulator and Tubing Assembly	Models through Serial No. L3627520

N/A = Part no longer available

© Copyright, Alliance Laundry Systems LLC – DO NOT COPY or TRANSMIT

Outer Tub, Cover and Pressure Hose (Drawing 2 of 2)

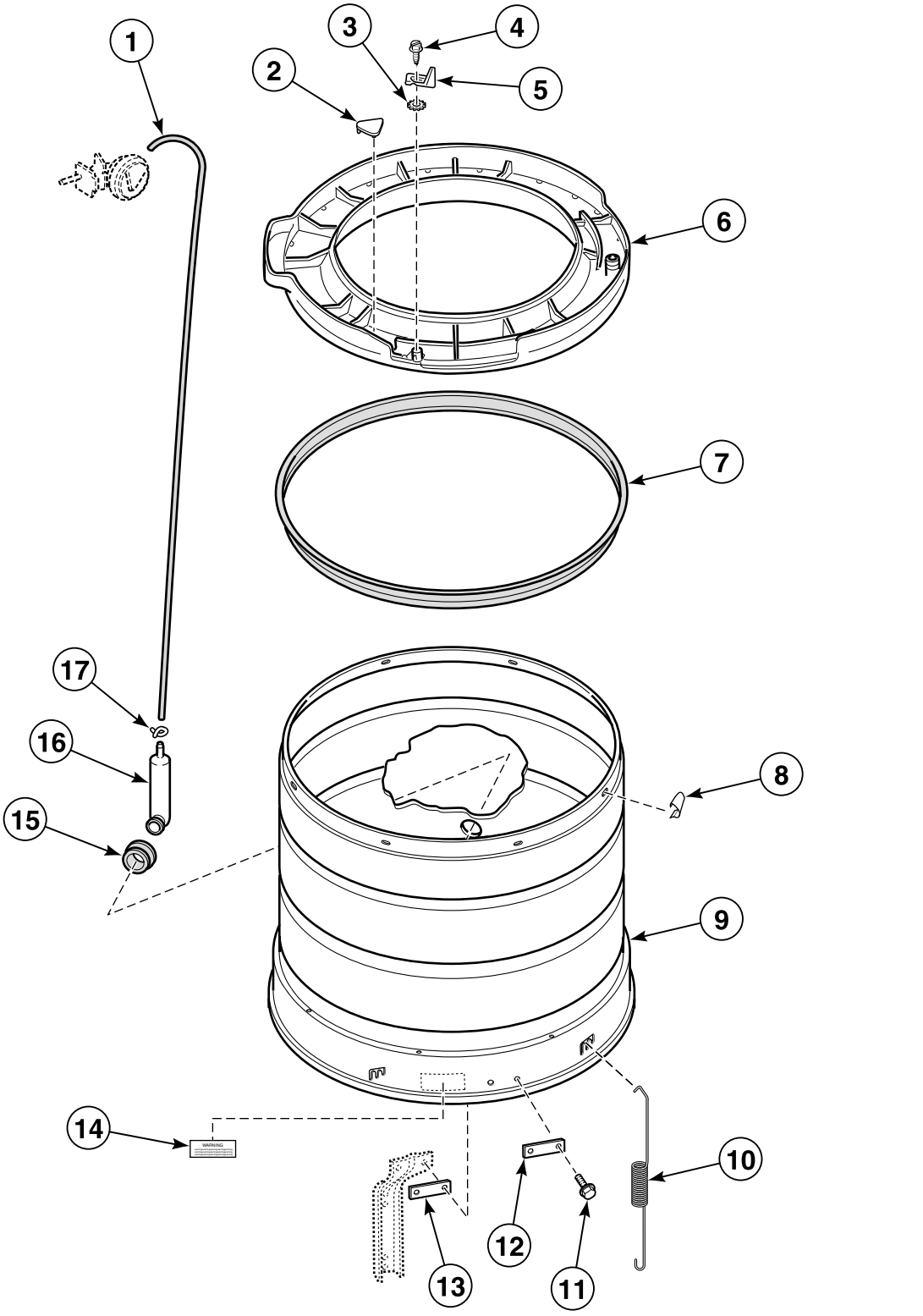

© Copyright, Alliance Laundry Systems LLC – DO NOT COPY or TRANSMIT

Outer Tub, Cover and Pressure Hose (Drawing 2 of 2)

REF	PART NO.	DESCRIPTION	COMMENTS
1	39124	Tubing	Model HA2010 starting Serial No. L3627521
	39125	Tubing	All other models starting Serial No. L3627521
2	29901	Plug	
3	03815	Washer	
4	503661	Screw	
5	N/A	Trigger	
6	31153	Outer Tub Cover	Includes item 2
7	27184	Tub Cover Gasket	Included with 356P3 Hub and Seal Kit
8	27017	Spring Clip	
9	507P3	Outer Tub Kit	Model HA2010 starting Serial No. L3627521
	N/A	Outer Tub	All other models starting Serial No. L3627521
10	27239	Leg Spring	
11	35369	Screw	
12	27926	Leg Plate	.063 inch thick
13	N/A	Leg Plate	.032 inch thick
14	N/A	Warning Sticker	
15	29175	Grommet	Models starting Serial No. L3627521
16	30907	Pressure Bulb	Models starting Serial No. L3627521
17	39282	Hose Clamp	Models starting Serial No. L3627521

N/A = Part no longer available

© Copyright, Alliance Laundry Systems LLC – DO NOT COPY or TRANSMIT

Motor and Mounting Bracket - Models Through Serial No. C3486773

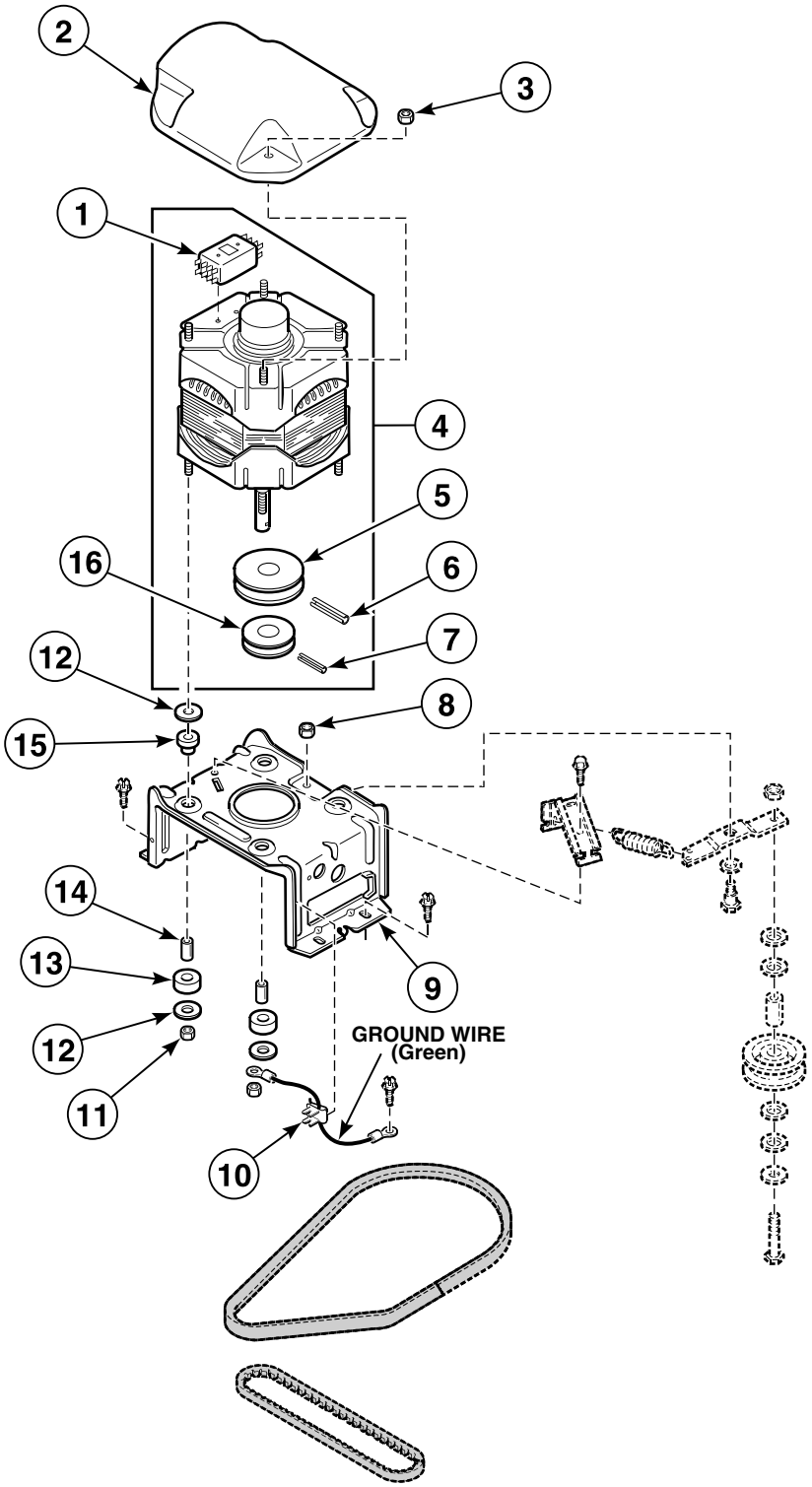

W462P_200639

© Copyright, Alliance Laundry Systems LLC – DO NOT COPY or TRANSMIT

Motor and Mounting Bracket - Models Through Serial No. C3486773

REF	PART NO.	DESCRIPTION	COMMENTS
	258P3	Capacitor Kit	For areas where low voltage exists
	28131	Motor Harness Assembly	Washers equipped with long motor wire harness; Models HA2410, HA2411, HA2620, HA2621, HA4210, HA4210-2200, HA4211, HA4211-2200, HA4260, HA4261, HA4290, HA4291, HA4370, HA4371, HA4520, HA4521, HA4590, HA4591, HA5590, HA5591, HA6000, HA6001, HA6420, HA6421, HA6450, HA6452, HA6470, HA6471, HA7001 and HA7221
1	N/A	Motor Switch	
2	27136	Motor Shield	
3	N/A	Nut	
4	27658P	Motor Kit	1 speed; 120 Volt/60 Hertz/1 Phase; Models HA2010, HA2300, HA3000, HA3001, HA4010, HA4010-2200, HA4011, HA4011-2200, HA4020, HA4021, HA4340, HA4341, HA4510, HA4511, HA5000, HA5001, HA5320 and HA5321
	27179P	Motor Kit	2 speed; 120 Volt/60 Hertz/1 Phase; Models HA2410, HA2411, HA2620, HA2621, HA4210, HA4210-2200, HA4211, HA4211-2200, HA4260, HA4261, HA4370, HA4371, HA4520, HA4521, HA6000, HA6001, HA6420, HA6421, HA6450, HA6452, HA6470, HA6471, HA7001 and HA7221
	28155P	Motor Kit	1 speed; 110 Volt/50 Hertz/1 Phase; Models HA4010-1088 and HA4011-1088
	30010P	Motor Kit	1 speed; 230 Volt/50 Hertz/1 Phase; Models HA1000-3059, HA4010-3059, HA4011-3059, HA4511-3050 and HA4511-3062
5	N/A	Drive Motor Pulley	
6	N/A	Roll Pin	
7	28087	Roll Pin	Models HA1000-3059, HA4010-1088, HA4010-3059, HA4011-1088, HA4011-3059, HA4511-3050 and HA4511-3062
	10416	Roll Pin	All other models
8	52566	Nut	
9	28791	Motor Mount Bracket	
10	00161	Grounding Clip	
11	23604	Nut	
12	03888	Washer	
13	N/A	Rubber Motor Mount	Lower
14	N/A	Spacer	
15	N/A	Rubber Motor Mount	Upper
16	N/A	Pump Motor Pulley	Models HA1000-3059, HA4010-1088, HA4010-3059, HA4011-1088, HA4011-3059, HA4511-3050 and HA4511-3062
	27104	Motor Pulley	Pump; All other models

N/A = Part no longer available

© Copyright, Alliance Laundry Systems LLC – DO NOT COPY or TRANSMIT

Belts and Idler Assembly - Models Through Serial No. C3486773

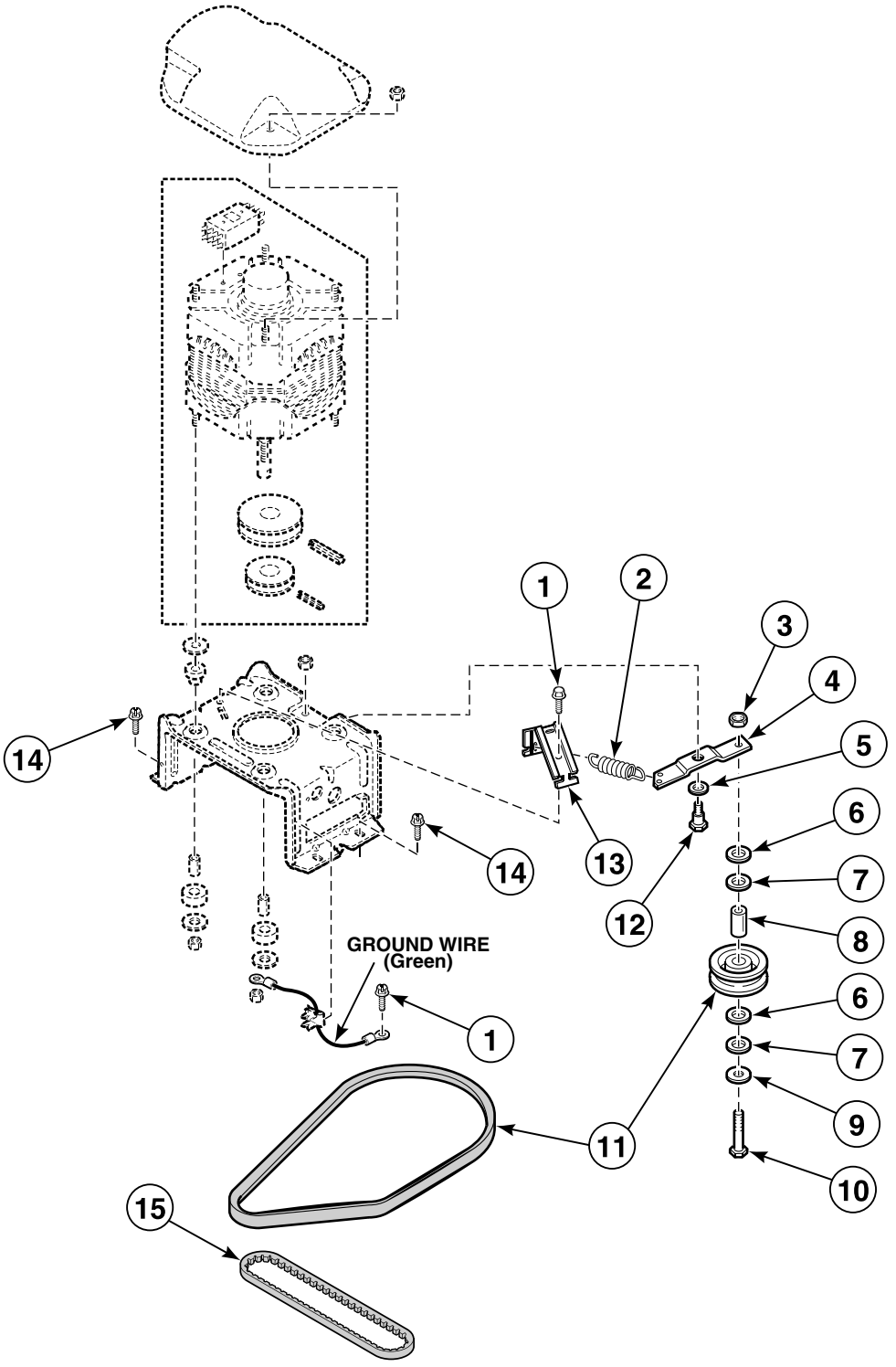

W462PA_200639

© Copyright, Alliance Laundry Systems LLC – DO NOT COPY or TRANSMIT

Belts and Idler Assembly - Models Through Serial No. C3486773

REF	PART NO.	DESCRIPTION	COMMENTS
1	503661	Screw	
2	N/A	Spring	
3	56156	Nut	
4	N/A	Idler Lever	
5	81392	Washer	
6	N/A	Washer	
7	N/A	Washer	
8	N/A	Bearing	
9	N/A	Washer	
10	N/A	Bolt	
11	374P3	Idler Pulley Kit	Includes agitate and spin belt; Models HA1000-3059, HA4010-1088, HA4010-3059, HA4011-1088, HA4011-3059, HA4511-3050 and HA4511-3062
	364P3	Idler Pulley Kit	Includes agitate and spin belt; All other models
12	27229	Screw	
13	N/A	Spring Arm	
14	N/A	Screw	
15	28043	Pump Belt	Models HA1000-3059, HA4010-1088, HA4010-3059, HA4011-1088, HA4011-3059, HA4511-3050 and HA4511-3062
	27155	Pump Belt	All other models

N/A = Part no longer available

© Copyright, Alliance Laundry Systems LLC – DO NOT COPY or TRANSMIT

Motor and Mounting Bracket - Models Starting Serial No. C3486774

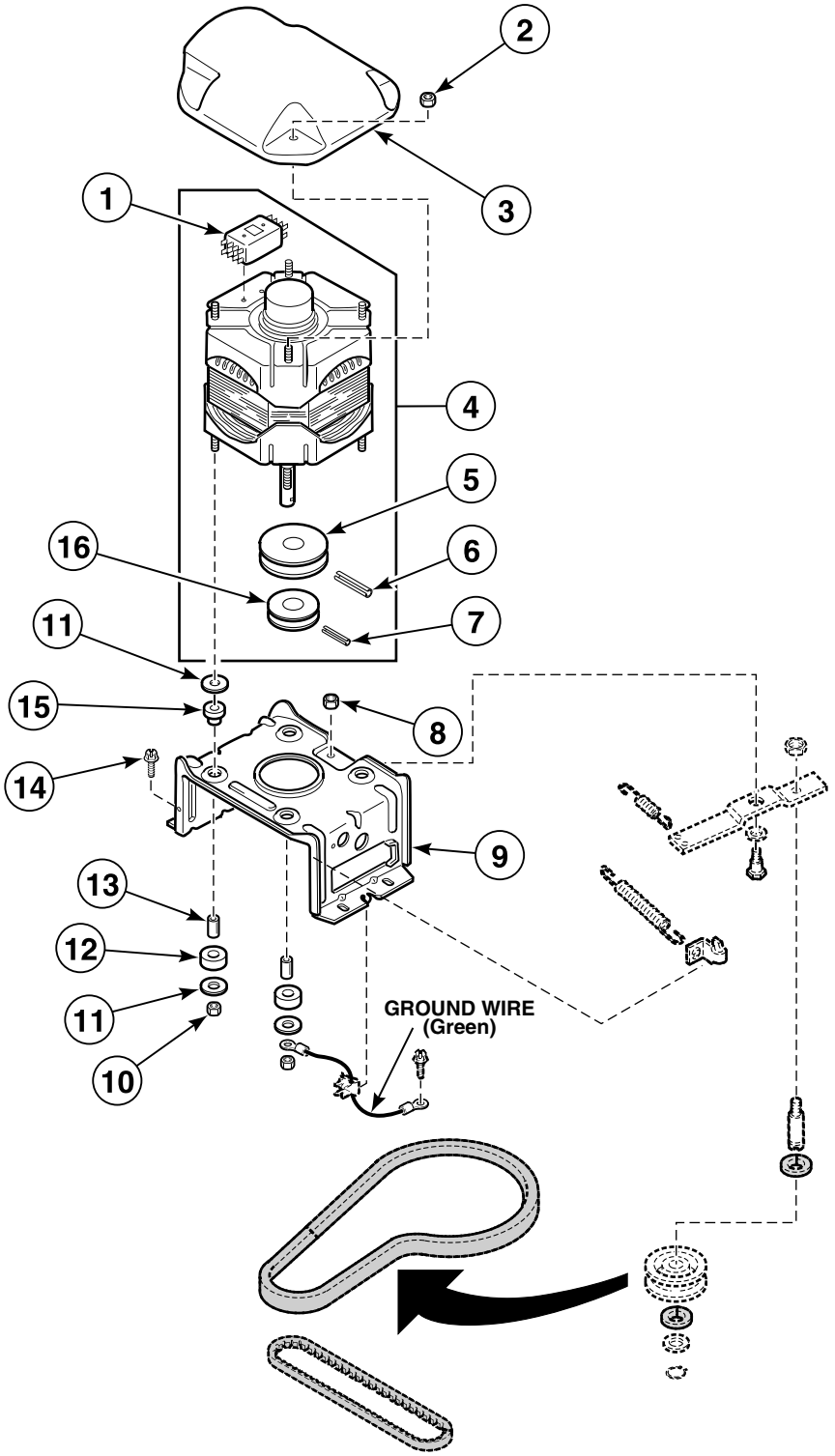

W463P_200639

© Copyright, Alliance Laundry Systems LLC – DO NOT COPY or TRANSMIT

Motor and Mounting Bracket - Models Starting Serial No. C3486774

REF	PART NO.	DESCRIPTION	COMMENTS
	258P3	Capacitor Kit	For areas where low voltage exists
	28131	Motor Harness Assembly	Washers equipped with long motor wire harness; Models HA2410, HA2411, HA2620, HA2621, HA4210, HA4210-2200, HA4211, HA4211-2200, HA4260, HA4261, HA4290, HA4291, HA4370, HA4371, HA4520, HA4521, HA4590, HA4591, HA5590, HA5591, HA6000, HA6001, HA6420, HA6421, HA6450, HA6452, HA6470, HA6471, HA7001 and HA7221
1	N/A	Motor Switch	
2	N/A	Nut	
3	27136	Motor Shield	
4	27658P	Motor Kit	1 speed; 120 Volt/60 Hertz/1 Phase; Models HA2010, HA2300, HA3000, HA3001, HA4000, HA4001, HA4010, HA4010-2200, HA4011, HA4011-2200, HA4020, HA4021, HA4340, HA4341, HA4500, HA4501, HA4510, HA4511, HA5000, HA5001, HA5320 and HA5321
	27179P	Motor Kit	2 speed; 120 Volt/60 Hertz/1 Phase; Models HA2410, HA2411, HA2620, HA2621, HA4210, HA4210-2200, HA4211, HA4211-2200, HA4260, HA4261, HA4290, HA4291, HA4370, HA4371, HA4520, HA4521, HA4590, HA4591, HA5590, HA5591, HA6000, HA6001, HA6420, HA6421, HA6450, HA6452, HA6470, HA6471, HA7001 and HA7221
	28155P	Motor Kit	1 speed; 110 Volt/50 Hertz/1 Phase; Models HA4010-1088 and HA4011-1088
	30010P	Motor Kit	1 speed; 230 Volt/50 Hertz/1 Phase; Models HA1000-3059, HA4010-3059, HA4011-3059, HA4511-3050 and HA4511-3062
5	N/A	Drive Motor Pulley	
6	N/A	Roll Pin	
7	28087	Roll Pin	Models HA1000-3059, HA4010-1088, HA4010-3059, HA4011-1088, HA4011-3059, HA4511-3050 and HA4511-3062
	10416	Roll Pin	All other models
8	52566	Nut	
9	28791	Motor Mount Bracket	
10	23604	Nut	
11	03888	Washer	
12	N/A	Rubber Motor Mount	Lower
13	N/A	Spacer	
14	N/A	Screw	
15	N/A	Rubber Motor Mount	Upper
16	N/A	Pump Motor Pulley	Models HA1000-3059, HA4010-1088, HA4010-3059, HA4011-1088, HA4011-3059, HA4511-3050 and HA4511-3062
	27104	Motor Pulley	Pump; All other models

N/A = Part no longer available

© Copyright, Alliance Laundry Systems LLC – DO NOT COPY or TRANSMIT

Belts and Idler Assembly - Models Starting Serial No. C3486774

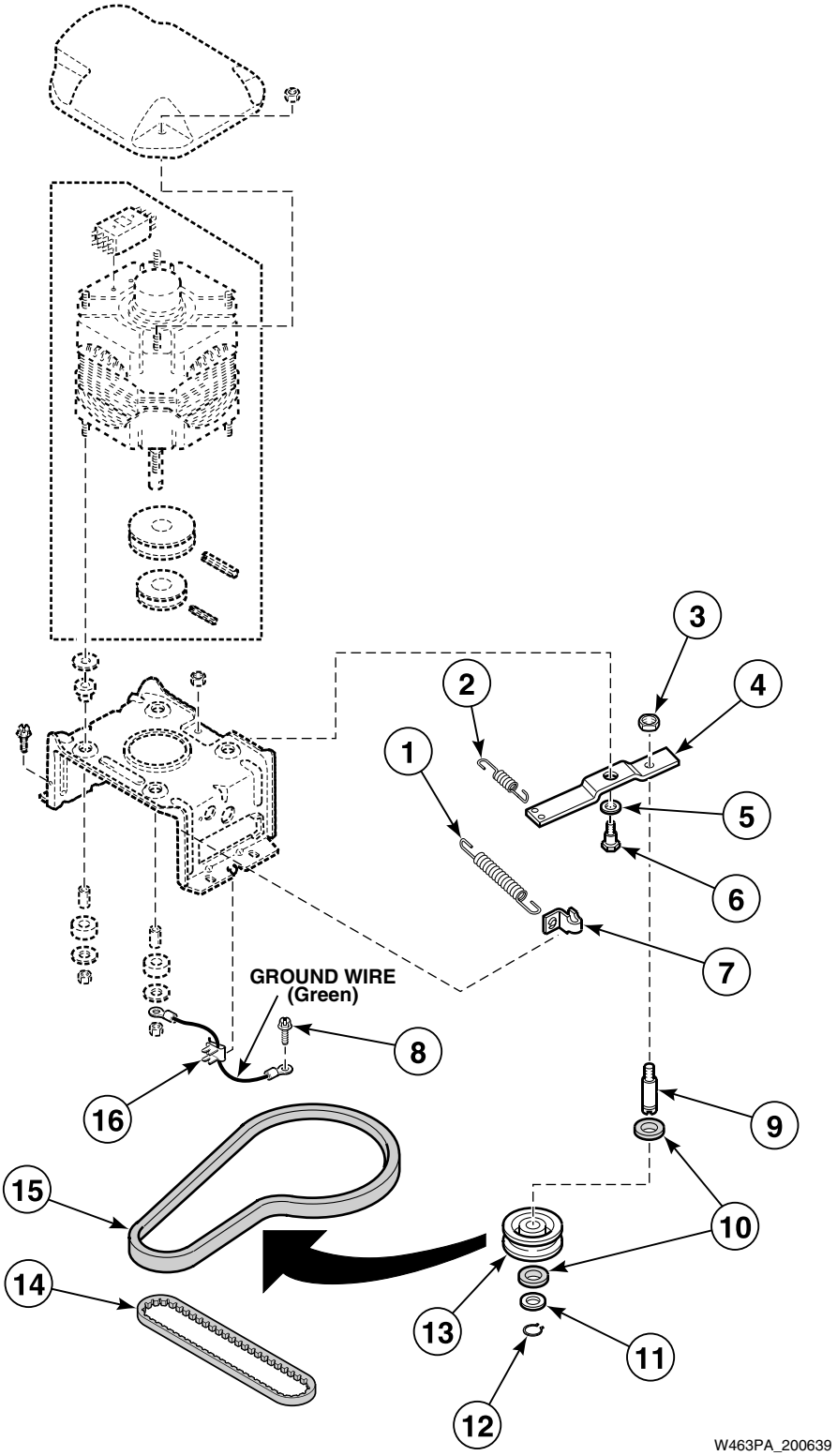

© Copyright, Alliance Laundry Systems LLC – DO NOT COPY or TRANSMIT

Belts and Idler Assembly - Models Starting Serial No. C3486774

REF	PART NO.	DESCRIPTION	COMMENTS
1	37366	Idler Spring	
2	30620	Idler Lever Helper Spring	Models starting Serial No. 4W000819
3	28803	Nut	
4	31054	Idler Lever	
5	81392	Washer	
6	27229	Screw	
7	28849	Spring Clip	
8	52909	Screw	
9	28802P	Idler Shaft	
10	29443	Washer	
11	52549	Washer	Nylatron
12	23748	Retaining Ring	
13	28800P	Idler Pulley	
14	28043	Pump Belt	Models HA1000-3059, HA4010-1088, HA4010-3059, HA4011-1088, HA4011-3059, HA4511-3050 and HA4511-3062
	27155	Pump Belt	All other models
15	33843	Belt	Agitate and spin; Models HA1000-3059, HA4010-1088, HA4010-3059, HA4011-1088, HA4011-3059, HA4511-3050 and HA4511-3062
	28808	Belt	Agitate and spin; All other models
16	00161	Grounding Clip	

N/A = Part no longer available

© Copyright, Alliance Laundry Systems LLC – DO NOT COPY or TRANSMIT

Bearing Housing, Brake, Pulley and Pivot Dome

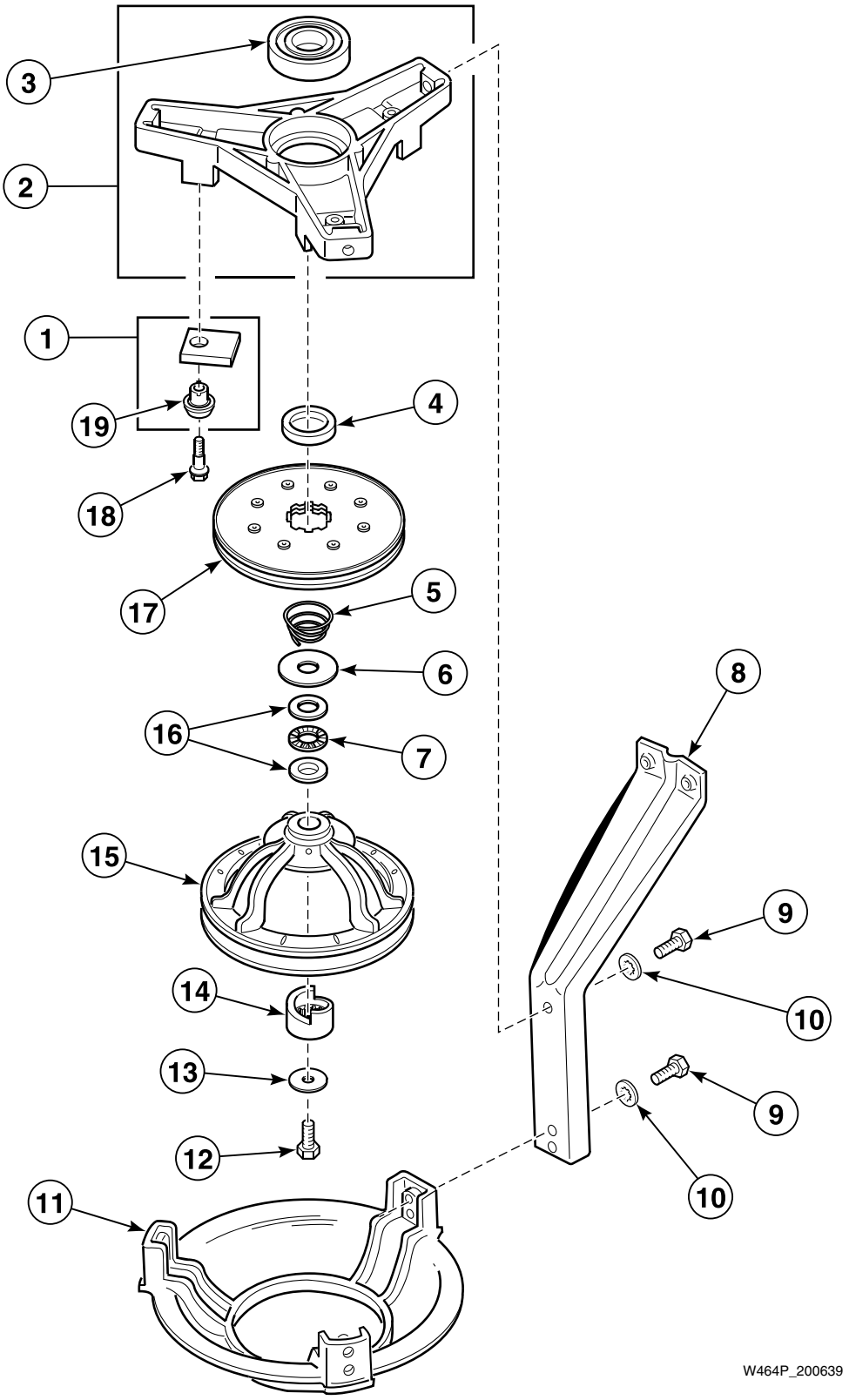

© Copyright, Alliance Laundry Systems LLC – DO NOT COPY or TRANSMIT

Bearing Housing, Brake, Pulley and Pivot Dome

REF	PART NO.	DESCRIPTION	COMMENTS
1	548P3	Brake Pad Kit	Includes sleeves and 3 pads
2	35746	Bearing Housing Assembly	Lower
3	28944RP	Upper and Lower Bearing	
4	27176	Spacer	
5	33435	Spring	
6	27015	Washer	
7	N/A	Needle Thrust Bearing	Models through Serial No. 4U029469
8	27090	Support Leg	
9	35369	Screw	
10	04366	Washer	Use with 02710 Cap Screw only
11	27124	Pivot Dome	
12	27220	Screw	
13	26509	Washer	
14	27018	Helix	
15	34232P	Pulley and Washers Kit	
16	N/A	Thrust Race	Models through Serial No. 4U029469
17	38505P	Brake Kit	
18	26547	Screw	
19	29993	Anti-Rotation Sleeve	

N/A = Part no longer available

© Copyright, Alliance Laundry Systems LLC – DO NOT COPY or TRANSMIT

Transmission Assembly and Balance Ring

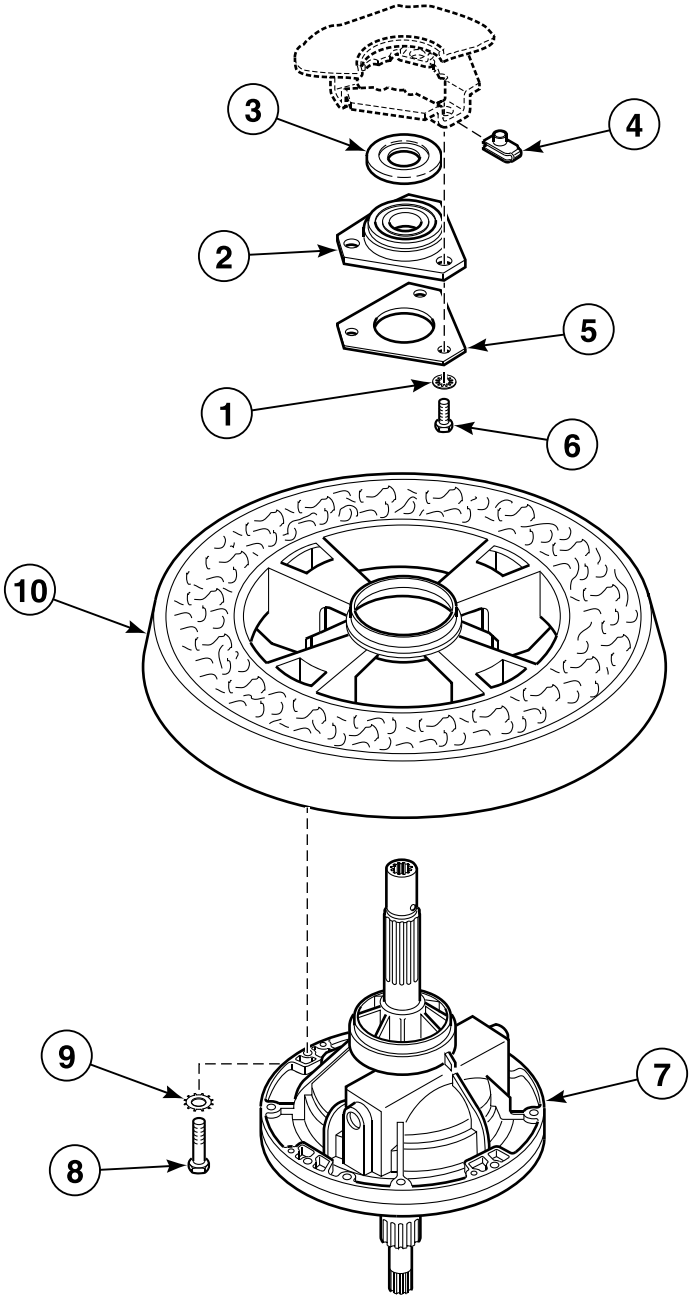

W465P_200639

© Copyright, Alliance Laundry Systems LLC – DO NOT COPY or TRANSMIT

Transmission Assembly and Balance Ring

REF	PART NO.	DESCRIPTION	COMMENTS
	27604P	Anti-Seize Compound	Apply to both the upper and lower transmission tubes
1	04366	Washer	
2	27182	Bearing Housing Assembly	Upper
3	27187	Flinger	
4	27222	Nut	
5	N/A	Washer	
6	M400057	Screw	
7	33227P	Transmission Assembly	Models with suffix code *A 9975
	30946P	Transmission Assembly	
8	N/A	Screw	
9	02431	Washer	
10	34731P	Balance Ring Assembly	

N/A = Part no longer available

© Copyright, Alliance Laundry Systems LLC – DO NOT COPY or TRANSMIT

Transmission Assembly

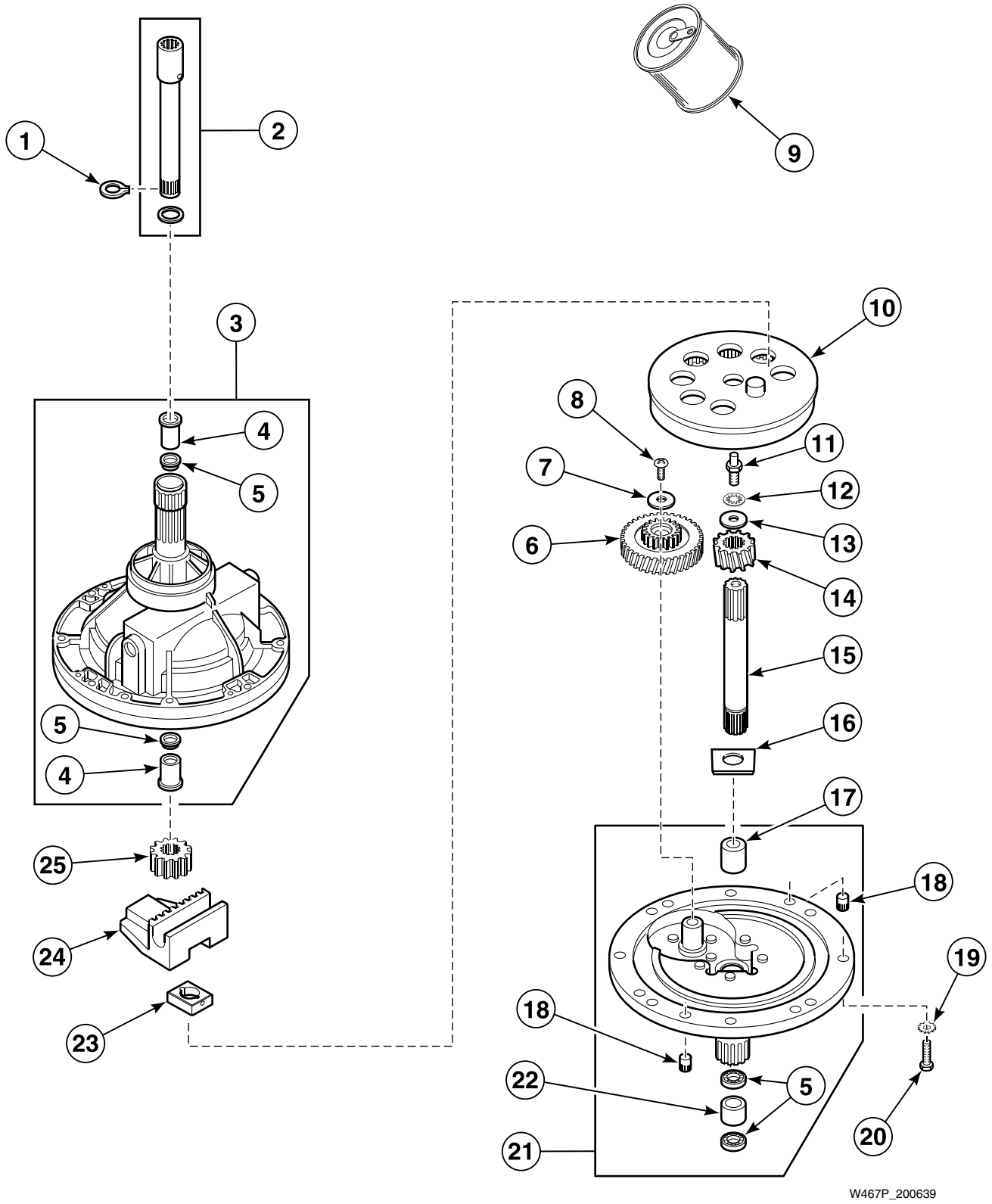

© Copyright, Alliance Laundry Systems LLC – DO NOT COPY or TRANSMIT

Transmission Assembly

REF	PART NO.	DESCRIPTION	COMMENTS
	37577P	Transmission Sealant	Use as a sealant between transmission case and cover; Use with 30946P Transmission Assembly
	N/A	Transmission Sealant	Use as a sealant between transmission case and cover; Use with 28430 Transmission Assembly
1	27197	Retaining Ring	
2	368P3	Coupling and Shaft Kit	
3	33223P	Transmission Case Assembly	
4	36107P	Packaged Bearing	
5	28114	Seal	
6	29161	Reduction Gear	
7	29260	Washer	
8	29273	Screw	
9	27243P	Transmission Oil	1 fill
10	26577	Gear and Stud Assembly	
11	201773	Screw	
12	21456	Washer	
13	26509	Washer	
14	36562	Drive Pinion	Use with 30946P Transmission Assembly
	29156	Input Pinion	Use with 28430 Transmission Assembly
15	27081P	Input Shaft	Input
16	N/A	Washer	
17	N/A	Clutch and Bearing Assembly	
18	N/A	Dowel Pin	
19	02431	Washer	
20	20253	Screw	
21	38287P	Transmission Cover Assembly	
22	27022	Bearing	
23	26493	Slide	
24	31526	Rack	
25	27003	Agitator Pinion	

N/A = Part no longer available

© Copyright, Alliance Laundry Systems LLC – DO NOT COPY or TRANSMIT

Pump Assembly, Bracket, Hoses and Siphon Break Kit (Drawing 1 of 2)

Models Equipped with Rubber Drain Hose

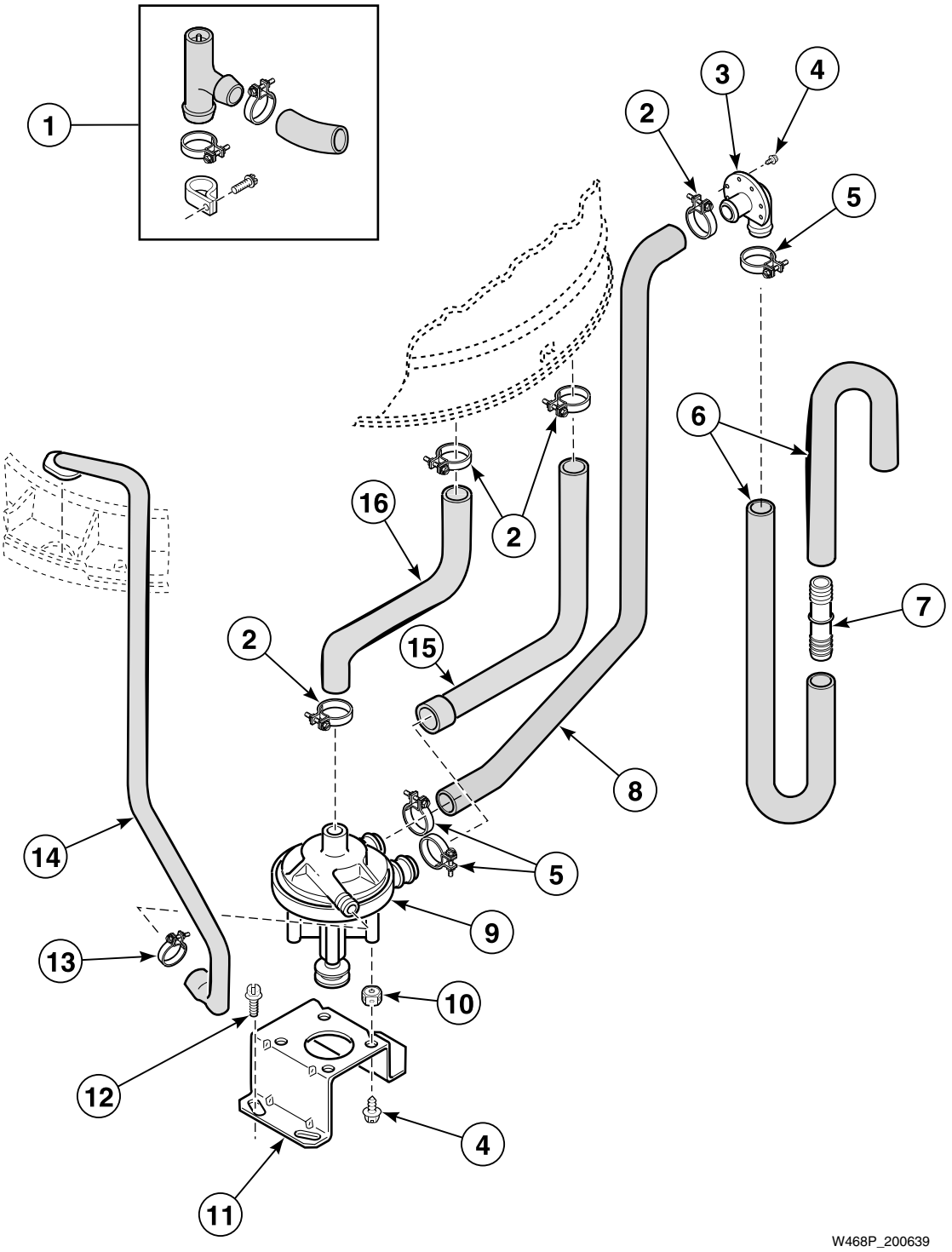

© Copyright, Alliance Laundry Systems LLC – DO NOT COPY or TRANSMIT

Pump Assembly, Bracket, Hoses and Siphon Break Kit (Drawing 1 of 2)

REF	PART NO.	DESCRIPTION	COMMENTS
1	562P3	Siphon Break Kit	Must be installed in drain hose if the drain receptacle is lower than the cabinet top of the washer
2	20391	Hose Clamp	
3	23553	Drain Hose Elbow	
4	52909	Screw	
5	20211	Hose Clamp	
6	28293	Drain Hose	
7	25863	Hose Coupler	Use to splice hose if drain hose must be shortened. Cut hose between molded end and molded elbow
8	27161	Pump-to-Drain Elbow Hose	
9	31969	Pump Assembly	Includes item 10; Model HA2010
	31968	Pump Assembly	Includes item 10; All other models
10	N/A	On-Sert	
11	27105	Pump Mounting Bracket	
12	N/A	Screw	
13	N/A	Hose Clamp	
14	N/A	Recirculating Hose	All models except HA2010
15	27160	Drain Tub-to-Pump Hose	
16	N/A	Tub-to-Pump Hose	All models except HA2010

N/A = Part no longer available

© Copyright, Alliance Laundry Systems LLC – DO NOT COPY or TRANSMIT

Pump Assembly, Bracket, Hoses and Siphon Break Kit (Drawing 2 of 2)

Models Equipped with Plastic Drain Hose

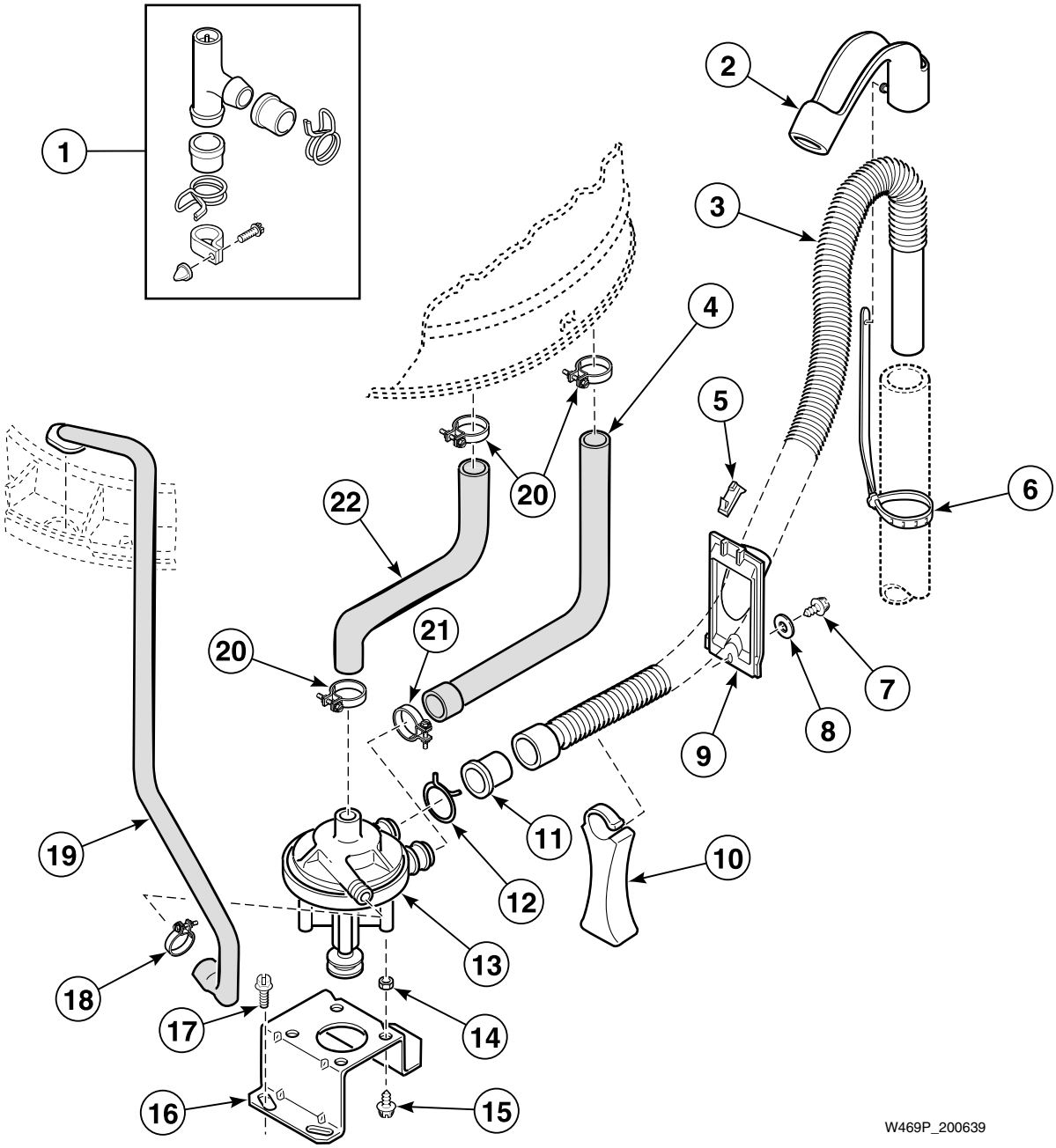

© Copyright, Alliance Laundry Systems LLC – DO NOT COPY or TRANSMIT

Pump Assembly, Bracket, Hoses and Siphon Break Kit (Drawing 2 of 2)

REF	PART NO.	DESCRIPTION	COMMENTS
	451P3	Drain Extension Kit	
1	562P3	Siphon Break Kit	Must be installed in drain hose if the drain receptacle is lower than the cabinet top of the washer
2	N/A	Drain Hose Sleeve	
3	39952	Drain Hose	
4	27160	Drain Tub-to-Pump Hose	
5	N/A	Hose Retainer Clip	
6	33489	Standpipe Strap	
7	27196	Screw	
8	20492	Washer	
9	N/A	Hose Retainer	Mounts to rear of washer
10	N/A	Hose Support	Mounts to washer base
11	N/A	Hose Adapter	
12	N/A	Hose Clamp	
13	31969	Pump Assembly	Includes item 14; Model HA2010
	31968	Pump Assembly	Includes item 14; All other models
14	N/A	On-Sert	
15	52909	Screw	
16	27105	Pump Mounting Bracket	
17	N/A	Screw	
18	N/A	Hose Clamp	
19	N/A	Recirculating Hose	All models except HA2010
20	20391	Hose Clamp	
21	20211	Hose Clamp	
22	N/A	Tub-to-Pump Hose	All models except HA2010

N/A = Part no longer available

© Copyright, Alliance Laundry Systems LLC – DO NOT COPY or TRANSMIT

Front Panel, Cabinet and Base

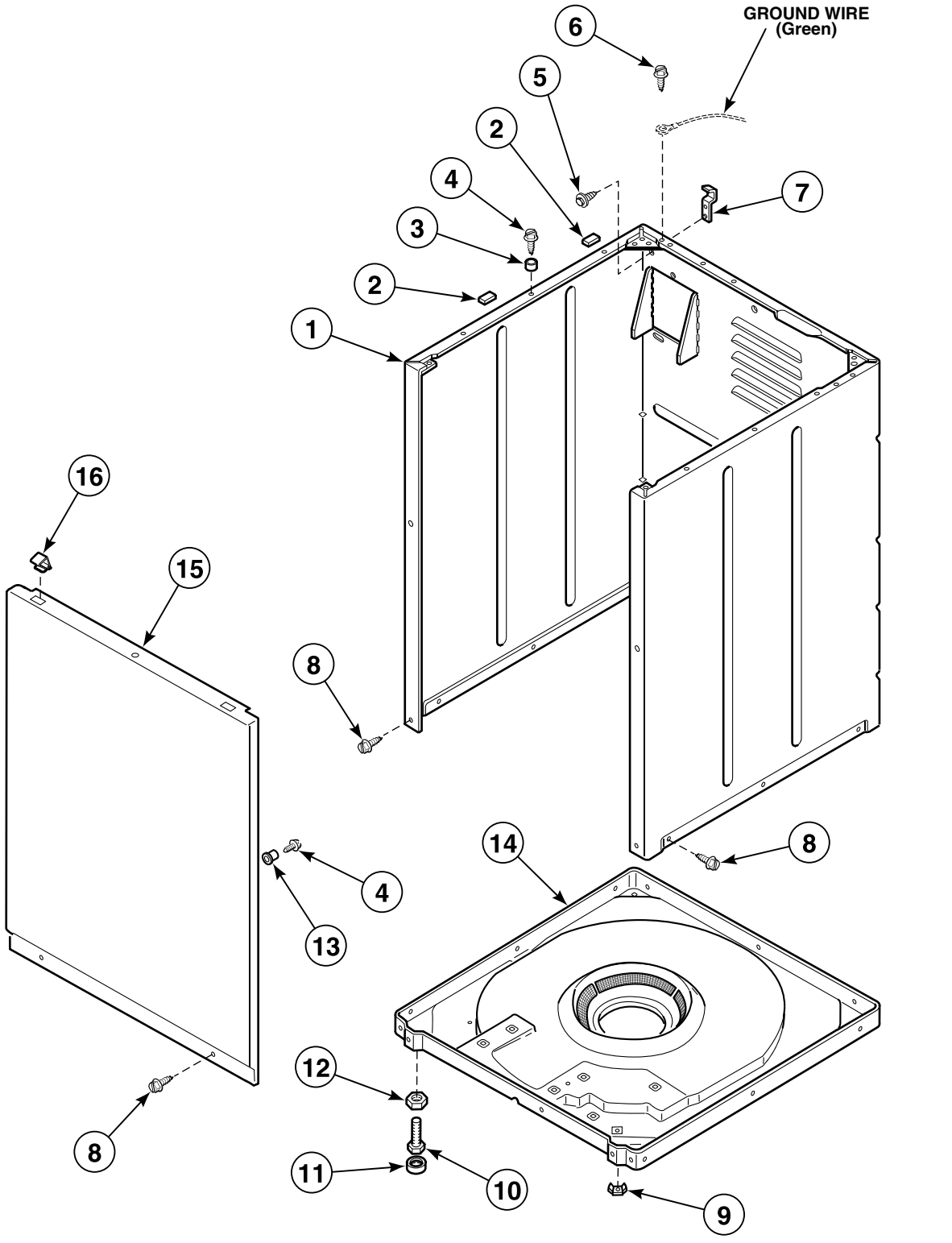

© Copyright, Alliance Laundry Systems LLC – DO NOT COPY or TRANSMIT

Front Panel, Cabinet and Base

REF	PART NO.	DESCRIPTION	COMMENTS
	26594P	Silicone Grease	For pads in base
1	38612WP	Service Cabinet Kit	White
	38612LP	Service Cabinet Kit	Almond
2	56128	Bumper Pad	
3	56079	Panel Locator	
4	39733	Screw	
5	51780	Screw	
6	23962	Screw	
7	27103	Hold-Down Lug Hinge	
8	27196	Screw	
9	N/A	Nut	
10	34319	Leveling Leg	
11	21749	Rubber Foot	Use with old leveling leg
	34318	Rubber Foot	Use with 34319 Leveling Leg
12	21899	Nut	
13	28102	Panel Locator	
14	31653P	Complete Base Assembly	Includes item 10, 434P3 Snubber Pad Kit and hardware
15	32708WP	Front Panel	White
	32708LP	Front Panel	Almond
16	28835	Speed Clip	

N/A = Part no longer available

© Copyright, Alliance Laundry Systems LLC – DO NOT COPY or TRANSMIT

Power Cord and Wire Terminals

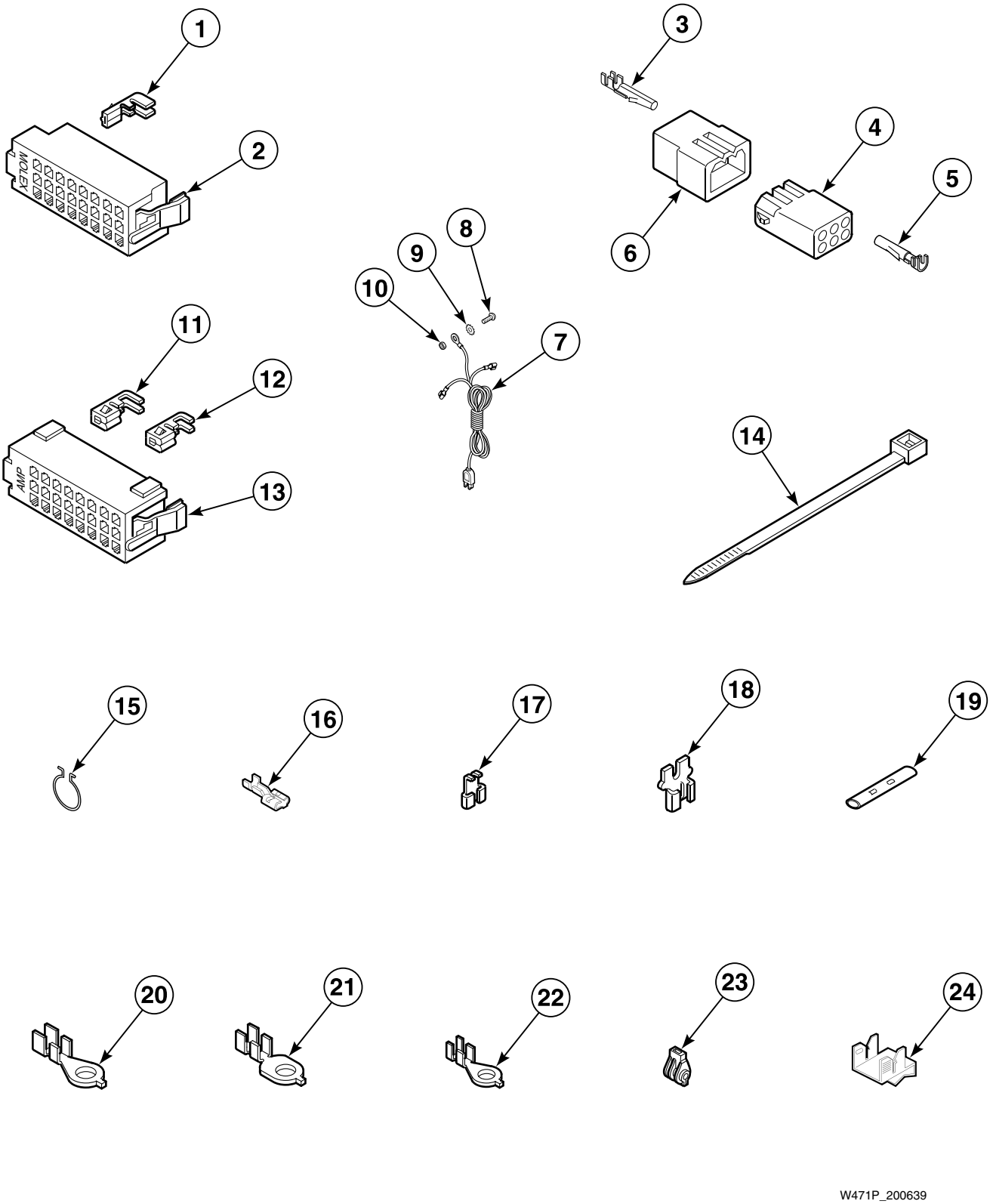

© Copyright, Alliance Laundry Systems LLC – DO NOT COPY or TRANSMIT

Power Cord and Wire Terminals

REF	PART NO.	DESCRIPTION	COMMENTS
1	00188	Female Terminal	Used for 1 or 2 wire application
2	32746	24 Position Housing	
3	00116	Male Pin Terminal	
4	26708	6 Circuit Receptacle	
5	00117	Female Pin Terminal	
6	23041	6 Circuit Plug	
7	34458	Lead-In Cord	
8	20267	Screw	
9	03815	Washer	
10	03673	Nut	
11	00180	Female Terminal	1 wire
12	00183	Female Terminal	2 wire
13	N/A	24 Position Housing	
14	55881	Harness Strap	
15	51291	Wire Clip	
16	00223	Female Spade Terminal	Large spade
17	00120	Female Flag Terminal	
18	29673	Terminal Adapter	
19	21091	Connector	
20	00113	Ring Terminal	1/4 inch ring
21	00111	Ring Terminal	Large shank
22	00110	Ring Terminal	Small shank
23	70210	Insulator	
24	00161	Grounding Clip	

N/A = Part no longer available

© Copyright, Alliance Laundry Systems LLC – DO NOT COPY or TRANSMIT

Special Tools

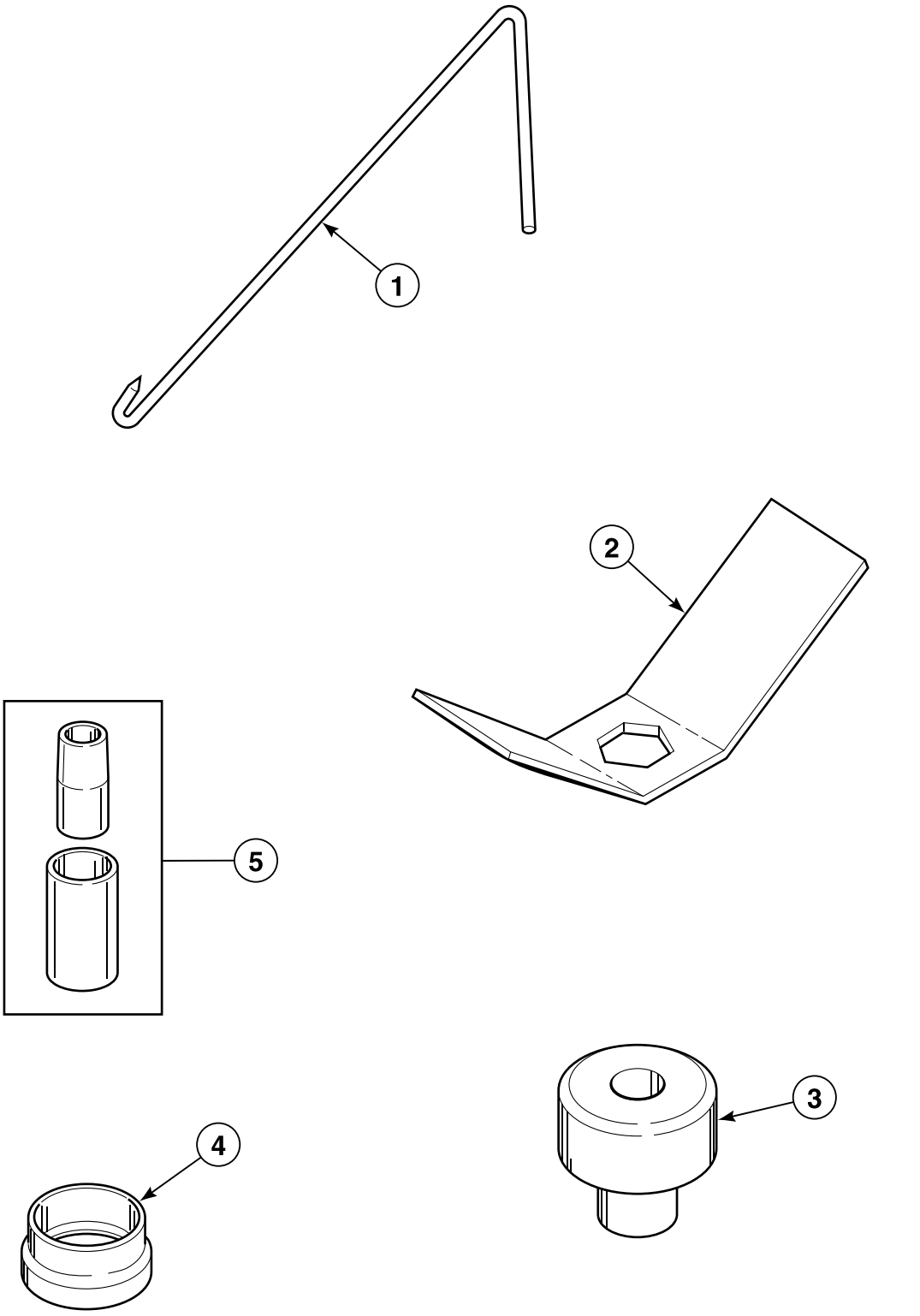

© Copyright, Alliance Laundry Systems LLC – DO NOT COPY or TRANSMIT

Special Tools

REF	PART NO.	DESCRIPTION	COMMENTS
	725P3	Tool Kit	Includes items 1 and 2
1	321P4	Spring Hook Tool	Use to remove 5 centering springs from outer tub
2	306P4	Hex Wrench Tool	Use to remove hex locknut from washtub hub
3	N/A	Guide Spindle	Use to remove hub from transmission
4	N/A	Seal Installer	Use to install 356P3 Washer Seal Kit
5	242P4	Spring Installer	Use to install brake spring

N/A = Part no longer available

© Copyright, Alliance Laundry Systems LLC – DO NOT COPY or TRANSMIT

Notes

© Copyright, Alliance Laundry Systems LLC – DO NOT COPY or TRANSMIT

Parts Index

A

Accumulator and Tubing Assembly
30930P 27
Agitator
33514 21
Agitator Pinion
27003 43
Agitator Shaft Assembly
28091 23
Anti-Rotation Sleeve
29993 39
Anti-Seize Compound
27604P 41

B

Backflow Preventer Assembly
34280 ..... 15, 17
Balance Ring Assembly
34731P 41
Bearing
27022 43
Bearing Housing Assembly
27182 41
35746 39
Belt
28808 37
33843 37
Bleach Dispenser
34776 11
Brake Kit
38505P 39
Brake Pad Kit
548P3 39
Bumper
21685 11
Bumper Pad
56128 49
Bushing
27625 11

C

Capacitor Kit
258P3 ..... 31, 35
Complete Base Assembly
31653P 49
Connector
21091 51
Coupling and Shaft Kit
368P3 43

D

Disconnect Power Warning Label
505281 11
Drain Extension Kit
451P3 47
Drain Hose
28293 45
39952 47
Drain Hose Elbow
23553 45
Drain Tub-to-Pump Hose
27160 ..... 45, 47
Drive Bell and Seal Kit
39508P 21
Drive Pinion
36562 43

F

Female Flag Terminal
00120 51
Female Pin Terminal
00117 51
Female Spade Terminal
00223 51
Female Terminal
00180 51
00183 51
00188 51
Fill Hose Kit
28330P 15, 17
38349P 15, 17
Filter Screen
F270300 ..... 15, 17
Flinger
27187 41
Front Panel
32708LP 49
32708WP 49

G

Gasket
27020 23
Gear and Stud Assembly
26577 43
Grommet
29175 29
Grounding Clip
00161 ..... 31, 37, 51

H

Harness Strap
55881 51

N/A items do not appear in index.

© Copyright, Alliance Laundry Systems LLC – DO NOT COPY or TRANSMIT

Helix
27018 39
Hex Wrench Tool
306P4 53
Hinge
27626 11
Hold-Down Lug Hinge
27103 49
Hose Clamp
20211 ..... 15, 17, 45, 47
20391 ..... 45, 47
29210 17
35370 17
36801 ..... 15, 17
39282 29
Hose Coupler
25863 45
Housing, 24 Position
32746 51
Hub and Seal Kit
495P3 21

I

Idler Lever
31054 37
Idler Lever Helper Spring
30620 37
Idler Pulley
28800P 37
Idler Pulley Kit
364P3 33
374P3 33
Idler Shaft
28802P 37
Idler Spring
37366 37
Input Pinion
29156 43
Input Shaft
27081P 43
Insulator
70210 51

L

Lead-In Cord
34458 51
Leg Plate
27926 ..... 27, 29
Leg Spring
27239 ..... 27, 29
Leveling Leg
34319 49
Lid Switch Catch
27149 11
Lid Switch Shield
29042 13
Lint Filter
33521 25
Lint Filter Fastener
29474 25

M

Male Pin Terminal
00116 51
Mixing Valve
33930P 19
35856P 19
Mixing Valve Hose
27183 ..... 15, 17
Mixing Valve Mounting Bracket
39407 ..... 15, 17
Motor Harness Assembly
28131 ..... 31, 35
Motor Kit
27179P 31, 35
27658P 31, 35
28155P 31, 35
30010P 31, 35
Motor Mount Bracket
28791 ..... 31, 35
Motor Pulley
27104 ..... 31, 35
Motor Shield
27136 ..... 31, 35

N

Nut
03673 ..... 11, 51
21752 11
21899 49
23604 ..... 31, 35
24522 11
27222 41
28803 37
29043 13
29220 ..... 21, 25
36020 11
52566 ..... 31, 35
56156 33
57584 ..... 5, 7

O

Outer Tub Cover
31153 ..... 27, 29
Outer Tub Kit
507P3 ..... 27, 29
Out-of-Balance Switch Bracket
27250 13
Out-of-Balance Switch Lever
27602 13

P

Packaged Bearing
36107P 43
Panel Locator
28102 49
56079 49

N/A items do not appear in index.

© Copyright, Alliance Laundry Systems LLC – DO NOT COPY or TRANSMIT

Pivot Dome
27124 39
Plug
29901 29
Plug, 6 Circuit
23041 51
Pressure Bulb
30907 29
Pressure Switch
27778 ..... 5, 7
28615P 9
Pulley and Washers Kit
34232P 39
Pump Assembly
31968 ..... 45, 47
31969 ..... 45, 47
Pump Belt
27155 ..... 33, 37
28043 ..... 33, 37
Pump Mounting Bracket
27105 ..... 45, 47
Pump-to-Drain Elbow Hose
27161 45

R

Rack
31526 43
Receptacle, 6 Circuit
26708 51
Reduction Gear
29161 43
Retaining Ring
23748 37
27197 ..... 23, 43
Ring Terminal
00110 51
00111 51
00113 51
Roll Pin
10416 ..... 31, 35
28087 ..... 31, 35
Rubber Foot
21749 49
34318 49

S

Screw
M400057 41
Q6516 13
201773 43
20253 43
20267 ..... 11, 51
23008 11
23962 ..... 5, 7, 9, 11, 15, 17, 49
25232 ..... 5, 7, 9
26547 39
27196 ..... 47, 49
27202 ..... 23, 25
27220 39
27229 ..... 33, 37
28193 13
29273 43
35369 ..... 27, 29, 39
39733 49
503661 ..... 27, 29, 33
51780 49
52909 ..... 37, 45, 47
Seal
28114 43
Seal Kit
356P3 25
Service Cabinet Kit
38612LP 49
38612WP 49
Silicone Grease
26594P 49
Siphon Break Kit
562P3 ..... 45, 47
Slide
26493 43
Spacer
27176 39
Speed Clip
28835 49
Speed Selector Switch
27500 ..... 5, 7
Spline Insert
29728 21
Spring
33435 39
Spring Clip
27017 ..... 27, 29
28849 37
Spring Hook Tool
321P4 53
Spring Installer
242P4 53
Standpipe Strap
33489 47
Strain Relief
38384 11
Strainer
F270200 19
Support Barrel
56534 11
Support Leg
27090 39
Switch
27249 13

T

Temperature Switch
21300 ..... 5, 7
Terminal Adapter
29673 51
Timer
27693 ..... 5, 7
28093 5
28917P 5
28918P 5, 9
28948P 5
29966P 5

N/A items do not appear in index.

© Copyright, Alliance Laundry Systems LLC – DO NOT COPY or TRANSMIT

Tool Kit
725P3 53

Transmission Assembly
30946P 41
33227P 41

Transmission Case Assembly
33223P 43

Transmission Cover Assembly
38287P 43

Transmission Oil
27243P 43

Transmission Sealant
37577P 23, 43

Tub Assembly
39252P 25
39387P 25

Tub Cover Gasket
27184 ..... 27, 29

Tubing
39124 29
39125 29

U

Upper and Lower Bearing
28944RP 39

W

Washer
02431 ..... 41, 43
03815 ..... 11, 27, 29, 51
03888 ..... 31, 35
04366 ..... 39, 41
04704 23
20057 23
20290 ..... 15, 17
20492 47
21456 43
26509 ..... 39, 43
27015 39
27189 23
28094 25
29260 43
29443 37
52549 37
81392 ..... 33, 37
91176 ..... 5, 7

Washtub Gasket
39122 25

Water Inlet Hose
29182 17

Water Temperature Switch
28118 5

Wire Clip
51291 51

N/A items do not appear in index.

© Copyright, Alliance Laundry Systems LLC – DO NOT COPY or TRANSMIT